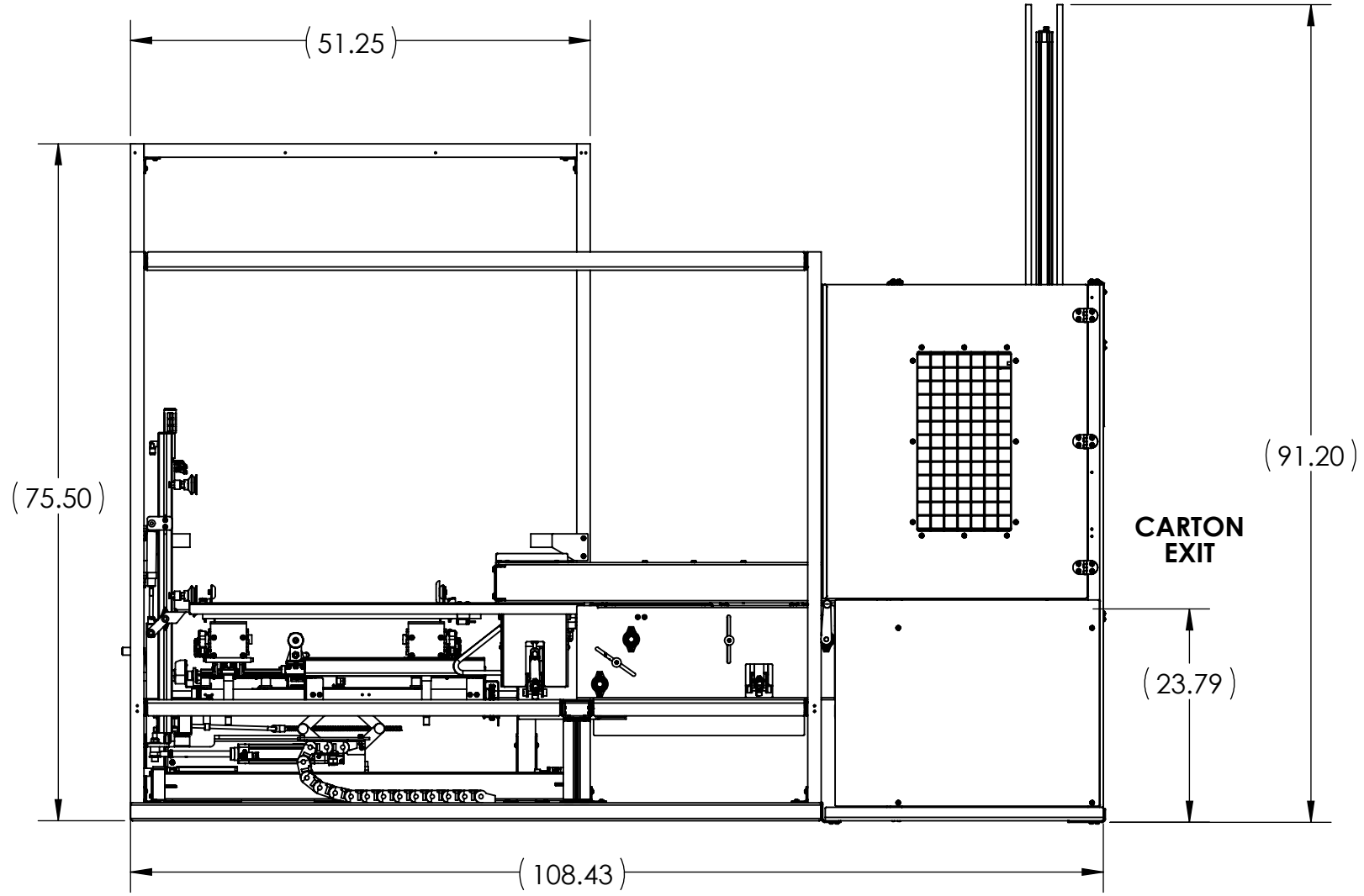

****FOOTPADS ADD 2-1/4" -6" TO HEIGHT**

****CASTERS ADD 6-1/4"TO HEIGHT**

UNLESS OTHERWISE SPECIFIED:		NAME	DATE
DIMENSIONS ARE IN INCHES TOLERANCES: FRACTIONAL ±1/64 ANGULAR: MACH ± 1/2 BEND ± ONE PLACE DECIMAL ±.05 TWO PLACE DECIMAL ±.015 THREE PLACE DECIMAL ±.005 BREAK ALL EDGES ROUND ALL SHARP CORNERS	DRAWN	CWS	10/09/19
	CHECKED		
	ENG APPR.		
	MFG APPR.		
	Q.A.		
MATERIAL	COMMENTS:		
FINISH			
DO NOT SCALE DRAWING			

PROPRIETARY AND CONFIDENTIAL
THE INFORMATION CONTAINED IN THIS DRAWING IS THE SOLE PROPERTY OF CLEVELAND EQUIPMENT. ANY REPRODUCTION IN PART OR AS A WHOLE WITHOUT THE WRITTEN PERMISSION OF CLEVELAND EQUIPMENT IS PROHIBITED.

Cleveland Equipment

TITLE:

FRONT VIEW

SIZE	DWG. NO.	REV
A	COMPLETE 2019 HOT MELT	

SCALE: 1:48	WEIGHT:	SHEET 1 OF 3

5 4 3 2 1

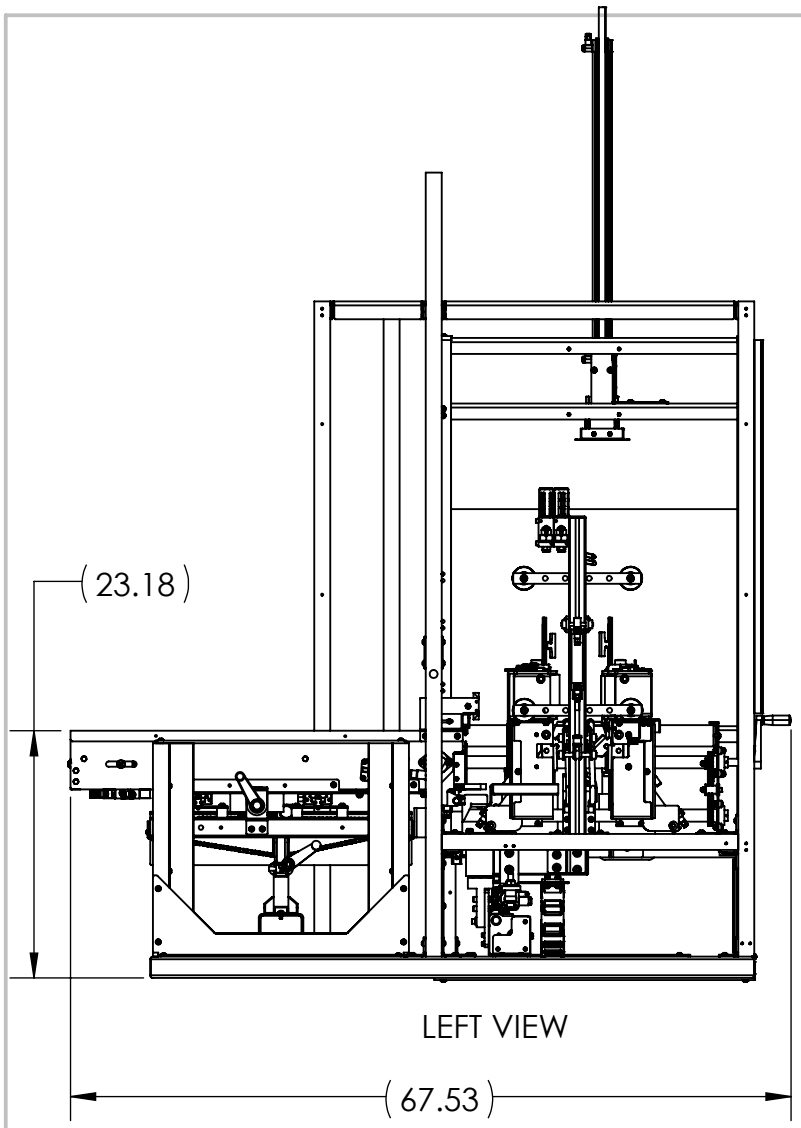

LEFT VIEW

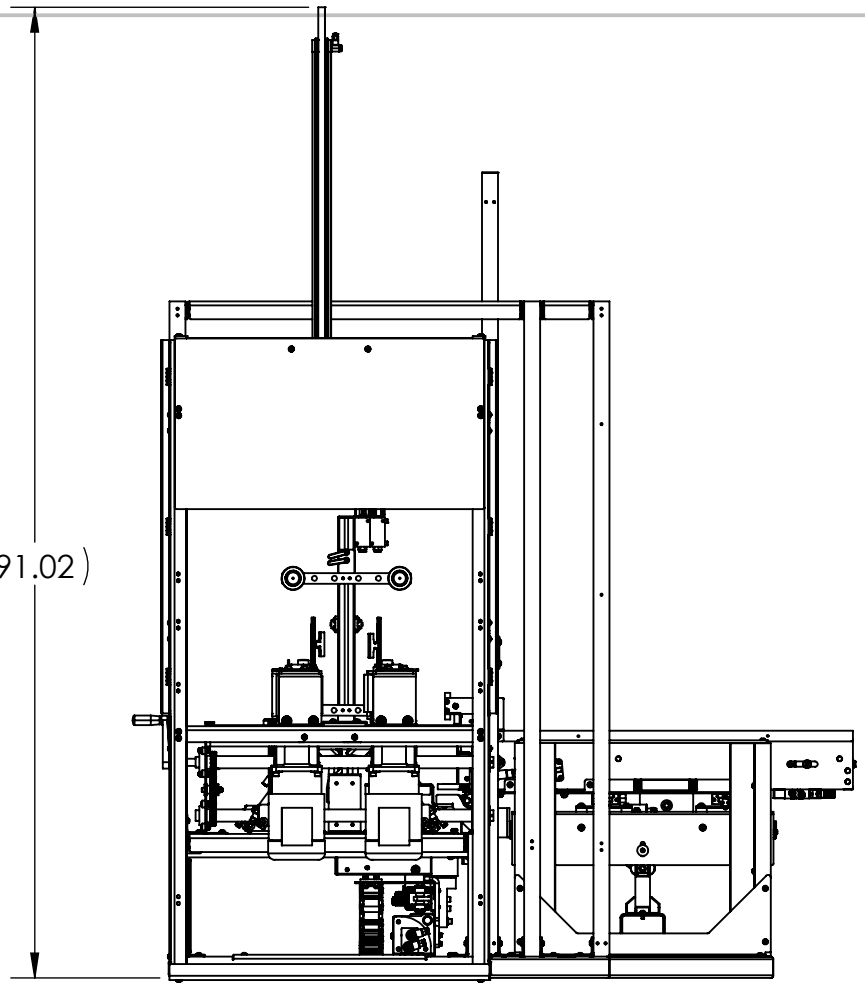

RIGHT VIEW

UNLESS OTHERWISE SPECIFIED:		NAME	DATE
DIMENSIONS ARE IN INCHES TOLERANCES: FRACTIONAL ± ANGULAR: MACH ± BEND ± TWO PLACE DECIMAL ± THREE PLACE DECIMAL ±	DRAWN		
	CHECKED		
	ENG APPR.		
	MFG APPR.		
INTERPRET GEOMETRIC TOLERANCING PER:	Q.A.		
MATERIAL	COMMENTS:		
FINISH			
DO NOT SCALE DRAWING			

PROPRIETARY AND CONFIDENTIAL

THE INFORMATION CONTAINED IN THIS DRAWING IS THE SOLE PROPERTY OF CLEVELAND EQUIPMENT. ANY REPRODUCTION IN PART OR AS A WHOLE WITHOUT THE WRITTEN PERMISSION OF CLEVELAND EQUIPMENT IS PROHIBITED.

Cleveland Equipment

TITLE:

LEFT & RIGHT VIEWS

SIZE	DWG. NO.	REV
A	COMPLETE 2019 HOT MELT	

SCALE: 1:48	WEIGHT:	SHEET 2 OF 3

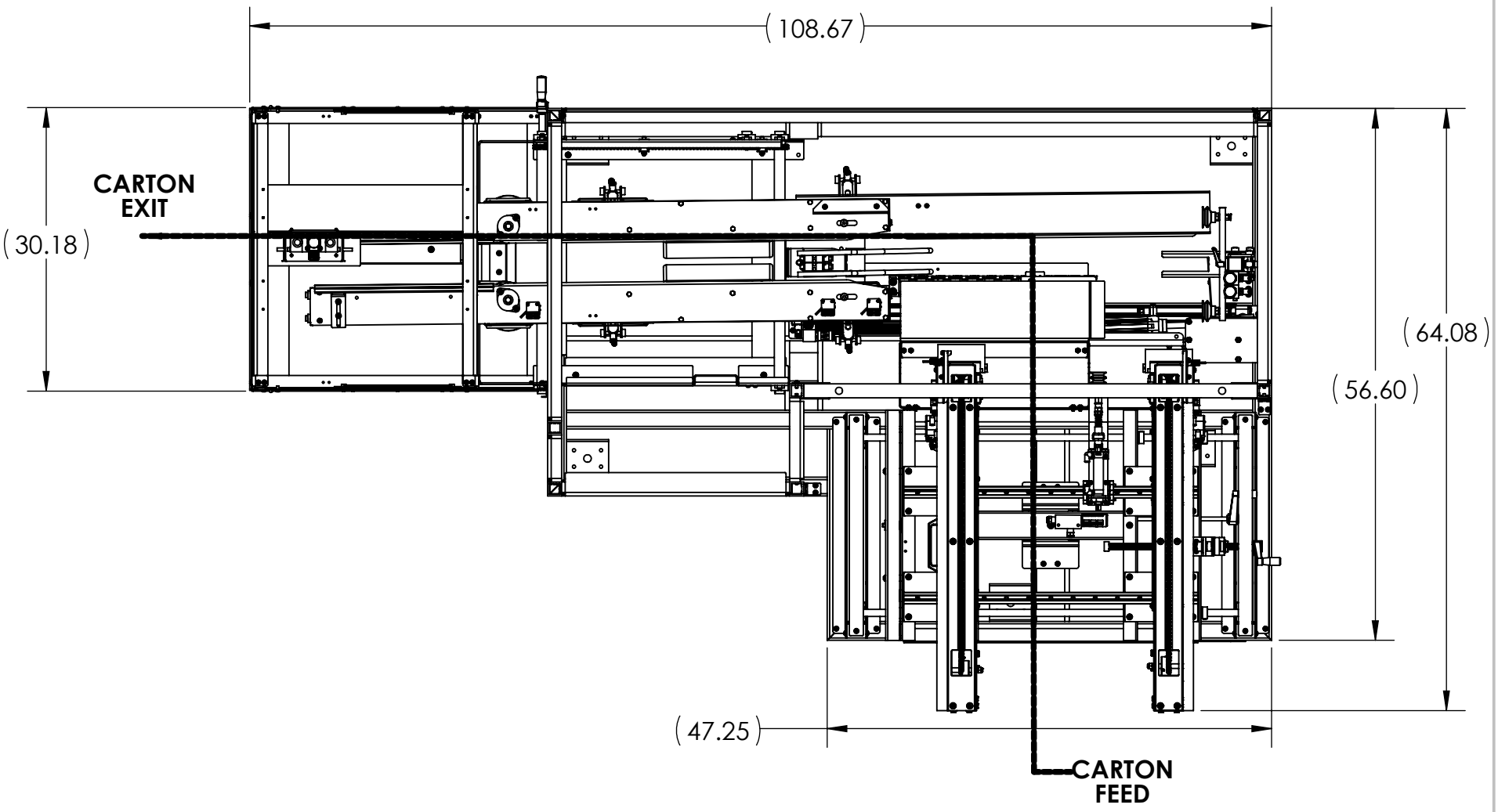

UNLESS OTHERWISE SPECIFIED:		NAME	DATE
DIMENSIONS ARE IN INCHES TOLERANCES: FRACTIONAL ± ANGULAR: MACH ± BEND ± TWO PLACE DECIMAL ± THREE PLACE DECIMAL ±	DRAWN		
	CHECKED		
	ENG APPR.		
	MFG APPR.		
INTERPRET GEOMETRIC TOLERANCING PER:	Q.A.		
MATERIAL	COMMENTS:		
FINISH			
DO NOT SCALE DRAWING			

PROPRIETARY AND CONFIDENTIAL

THE INFORMATION CONTAINED IN THIS DRAWING IS THE SOLE PROPERTY OF CLEVELAND EQUIPMENT. ANY REPRODUCTION IN PART OR AS A WHOLE WITHOUT THE WRITTEN PERMISSION OF CLEVELAND EQUIPMENT IS PROHIBITED.

Cleveland Equipment

TITLE:

TOP VIEW

SIZE	DWG. NO.	REV
A	COMPLETE 2019 HOT MELT	

SCALE: 1:48	WEIGHT:	SHEET 3 OF 3