ERX

ERX-15

Cleveland Equipment ERX Series
Automatic Case Erector

User Guide

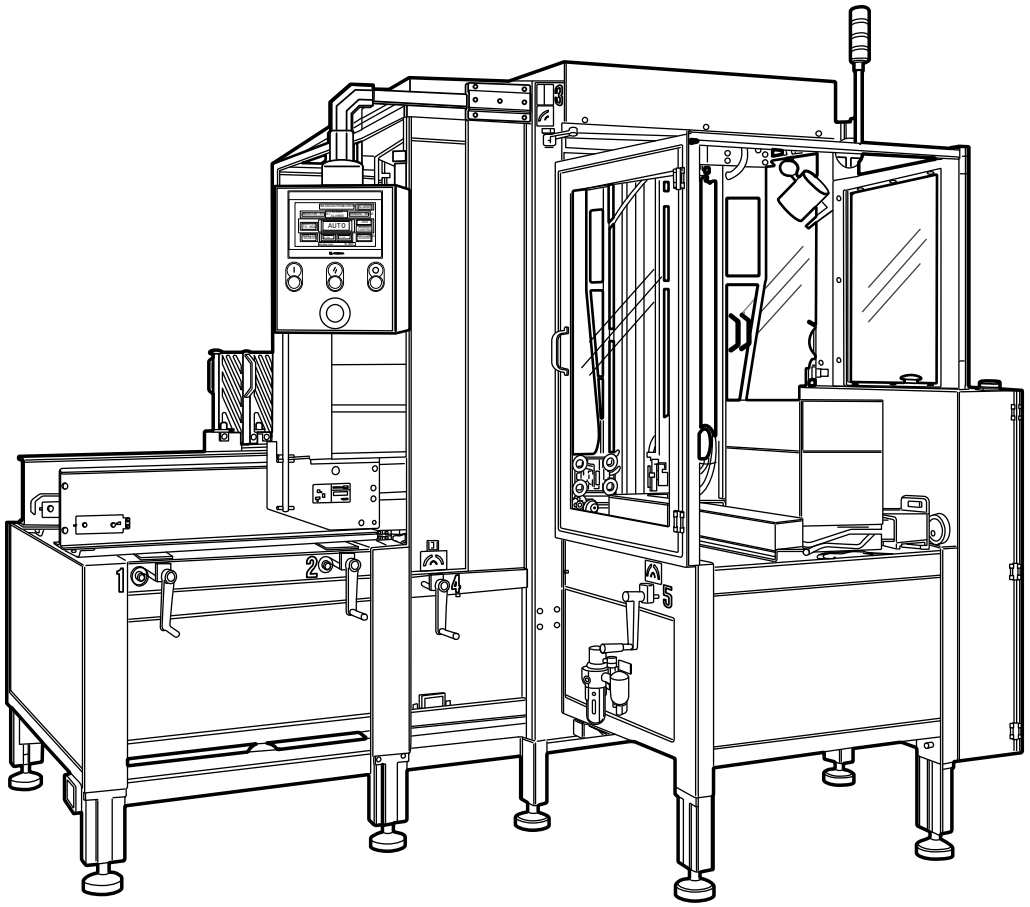

Cleveland Equipment

ERX-15

Cleveland Equipment ERX Series Automatic Case Erector

User Guide

Revised 07/29/2021

P/N 5011681 Rev B

Copyright and Trademarks
Copyright ©2019-2021 Cleveland Equipment
All rights reserved. All trademarks and brand names are the property of their respective owners.

Cleveland Equipment
540 Tasman Street
Madison, WI 53714

Phone: (866) 888-6327; E-mail: sales@clevelandequipment.com
www.clevelandequipment.com

Contents

Safety **8**
Safety Precautions 8
Explanation of Symbols 10

Introduction **12**
ERX-15 Automatic Case Erector Overview 12
ERX-15 Case Erector Features & Specifications 13
Dimensions 15
Machine Serial Number 16
Typical Applications 16

Unpacking **17**

Installation **19**
Location Requirements 19

Operation **24**
Main Power On / Off Switch and E-Stop 24
Control Panel 25
Main Screen 26
Case Dimensions — Case Blank to Finished Carton 27
Hand Cranks and Locations for Machine Adjustments 28
Machine Adjustments 29
Manual Control Screen 52
Monitoring Screens 61
Alarms 64

Adjustments **66**
Machine Base Height and Leveling Adjustment 66
Belt Tension Adjustment 66
Hand Crank and Case Size Dimension Adjustments 68

Maintenance **73**
Preventative Maintenance 73
Cleaning Exterior Surfaces 74

Troubleshooting **75**

Parts **78**
Case Erector 78
Forming Unit 79
Taper Unit 82
Left Belt Unit 84
Right Belt Unit 86
Taper Frame Unit 88
Adjust Front Unit 89
Adjust Rear Unit 90
Minor Flap Closer Unit 91

Major Flap Closer Unit 93
Major Flap Closer Seat Unit 96
Left Seat Unit 97
Right Seat Unit 99
Opener–W Unit 100
Opener–L Unit 102
Suction Unit 104
Opener Guide Unit 105
Opener Cart Unit 107
Opener Track Unit 108
Box Feeder Unit 109
Stand Unit 111
Top Pusher Unit 112
Right Guide Unit 113
Left Guide Unit 115
Pusher Unit 117
Top Adjust Unit 119
Opener Cart Guide Unit 121
Exit Guard Unit 122
Adjust Connect Unit 124
Electric Box Unit 126
Opener Drive Unit 128
Magazine Unit 129
Magazine Base Unit 131
Magazine Guide Unit 133
Cable Fixer Unit 134
Base Plane Unit 135
Extension Shaft Unit 137
Idle Sprocket Unit 138
Adjust Connect Unit 139
Magazine Belt – Right Unit 140
Sensor Plate – Right Unit 144
Bottom Guide – Right Unit 146
Magazine Belt – Left Unit 147
Bottom Guide – Left Unit 150
Sensor Plate – Left Unit 151
Separator Suction Unit 153
Main Electrical Panel 155
Control Panel & HMI 156
Main Panel Pneumatic Controls 159
A: Main Air In — Filter / Regulator, Fittings & Hose 162
B: Carton Push-Down Cylinders, Fittings & Hoses 163
C: Carton Suction Cup Extension 164
D: Separator Suction Cup Extension 165
E: Separator Suction Cup Suction 165
F: Magazine Stopper Cylinder & Fittings 166
G & K: Magazine Forward Cylinders — Long Side & Wide Side 167
H: Minor Flap Folding Cylinders, Fittings & Hoses 168
J: Major Flap Folding Rise Cylinders, Fittings & Hoses 169

M: Major Flap Folding Cylinders, Fittings & Hoses 170
L: Carton Suction Cups, Hoses & Fittings 171

Appendix A: Electrical Schematics 172
Electrical Schematic Page 1 of 12 172
Electrical Schematic Page 2 of 12 173
Electrical Schematic Page 3 of 12 174
Electrical Schematic Page 4 of 12 175
Electrical Schematic Page 5 of 12 176
Electrical Schematic Page 6 of 12 177
Electrical Schematic Page 7 of 12 178
Electrical Schematic Page 8 of 12 179
Electrical Schematic Page 9 of 12 180
Electrical Schematic Page 10 of 12 181
Electrical Schematic Page 11 of 12 182
Electrical Schematic Page 12 of 12 183

Appendix B: Pneumatic Schematic 184
Pneumatic Schematic Sheet 1 of 4 184
Pneumatic Schematic Sheet 2 of 4 185
Pneumatic Schematic Sheet 3 of 4 186
Pneumatic Schematic Sheet 4 of 4 187

Warranty Statement 188

Customer Support 190

Safety

Read this User Guide carefully and make it available to everyone connected with the supervision, maintenance, or operation of this machine. Keep a copy of this User Guide available with the machine at all times. Additional copies are available on request (www.clevelandequipment.com).

The development of a good safety program that is rigidly enforced is absolutely imperative when involved in the operation of industrial equipment. Our machinery is well designed and includes extremely important safety features. Proper installation, safe operation, and regular maintenance and upkeep are of far greater importance than the design. Improper operation of this machine can cause injury to operators or bystanders near the machine and can cause damage to the machine or nearby property. Only properly trained individuals following rigidly enforced safety rules, as recommended by ANSI and OSHA, should be allowed to operate these machines.

Be very careful when operating, adjusting, or servicing this equipment. If in doubt, stop and obtain qualified help before proceeding.

Safety Precautions

Before installing, operating, or servicing this equipment, please read the following precautions carefully:

- Always disconnect electrical power before attempting maintenance for any electrical or moving parts. Do not place hands, head, or any part of the body inside the confines of the machine unless moving mechanisms are securely restrained and the electrical supply is shut off.

- Do not attempt to open or work on the electrical box, junction boxes or other electrical components of the unit without first disconnecting power to the machine. Electrical shock hazard exists if power is not disconnected.

- Do not tamper with electrical wiring. Use only the specified power supply cable. Use only licensed electricians to check or repair electrical wiring.

- Do not by-pass any factory-designed safety features such as guards, interlocks, switches, etc.

- In order to prevent damage to the machinery or injury to personnel, do not increase the factory settings on either the electrical or mechanical overload safety devices. Do not operate a machine if such modifications have been made.

- Never operate this or any moving equipment without all covers and guards in place. The internal mechanism of most packaging machinery contains numerous shear, pinch, and in-running nip points, many of which are capable of causing severe injury and permanent disfiguration.

- Keep hands away from moving conveyors and moving parts. Conveyor belts that have become worn or frayed can be hazardous and should be replaced promptly.

- Do not stand or climb on any part of the case erector or frame or guards. Never provide service or attempt to clear a jam when the machine is running.

- To minimize the potential for personal injury, always be sure that the machine operators and others working on the machinery are properly trained in the correct use and operation of the equipment and properly instructed regarding the safety procedures for operation.

- Do not make any modifications to either the electrical circuitry or the mechanical assemblies of this machinery. Such modifications may introduce hazards that would not otherwise be associated with the machinery. Cleveland Equipment will not be responsible for any consequences resulting from such unauthorized modification. Do not operate a machine if any modification has been made.

- This equipment is designed for indoor operation in a typical clean, dry factory environment. Do not operate the machine in any extremely wet or oily environment that may exceed operating specifications.

- Keep combustible materials away from this equipment. The equipment may be a source of ignition.

- Do not wear loose clothing such as ties, scarves, jewelry etc. Long hair should be pulled back and/or covered while operating this machine.

Explanation of Symbols



Caution sign or Safety Alert symbol. Indicates caution, be alert, Your safety is involved. Knowledge of safe operation is required. Caution indicates a hazardous situation which, if not avoided, could result in minor or moderate injury or damage to equipment or nearby property.



Electrical hazard. Indicates caution, electrical shock hazard. Allow only a trained electrician to open the door or cover of the electrical panel or box. Shut off electrical power before attempting to open or work on the electrical box, junction boxes or other electrical components of the unit.



Ground symbol. Indicates ground. Use Class-3 (lower than 1000) cable to ground to earth. Incomplete grounding may lead to electrical shock.



Caution! Hot surface. The surface indicated may become very hot during normal operation. Keep fingers, hands, and exposed skin away from hot surfaces to avoid burns. Allow hot surfaces to cool to ambient room temperature before performing service.



Caution! Moving parts. Moving parts can crush fingers or hand. Keep hands and fingers away from moving parts in area indicated to avoid injury.



Caution! Pinch point entanglement. Pinch point hazard exists in area indicated. Shut down the machine before performing maintenance, repair, or adjustment.



Caution! blade. Hazard exists for cutting fingers or hand. Keep hands and fingers away from sharp blades in area indicated to avoid injury.



Moisture hazard. Keep Equipment dry. This equipment is designed for indoor operation in a typical clean, dry factory environment, protected from rain and moisture. Do not operate the machine in any extremely wet or oily environment that may exceed operating specifications.



Eye protection. Wear eye protection. Use protective equipment whenever circumstances require or when required by regulation or law. Wear safety glasses when operating or servicing this machine.



Refer to this User Guide for important safety information and operating instructions to set up, operate, adjust, and maintain this Automatic Case Erector.

Warning symbol. Indicates a hazardous situation which, if not avoided could result in death or serious injury. A warning indicates a situation potentially more severe than indicated by a caution message but not immanent as a danger message.

The warning symbol is associated with messages for conditions as shown below.

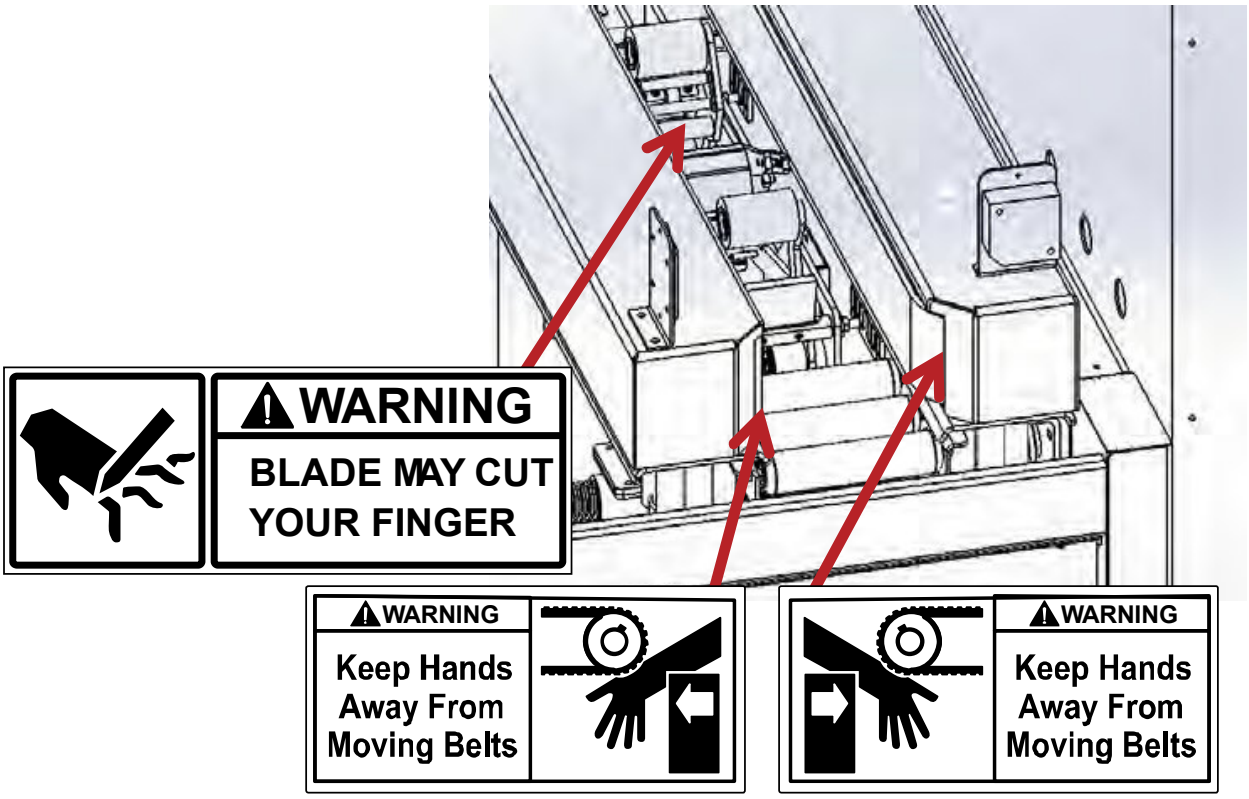

Introduction

The Cleveland Equipment ERX-15 Case Erector automatically unfolds and forms corrugated cartons from flat stock placed in the magazine hopper area. A tape head, installed below the exit drive belt area, seals the bottom seam of each carton as they move through the exit area. Each carton is presented at the machine exit formed and bottom-sealed with top flaps open, ready to be packed and sealed.

ERX-15 Automatic Case Erector Overview

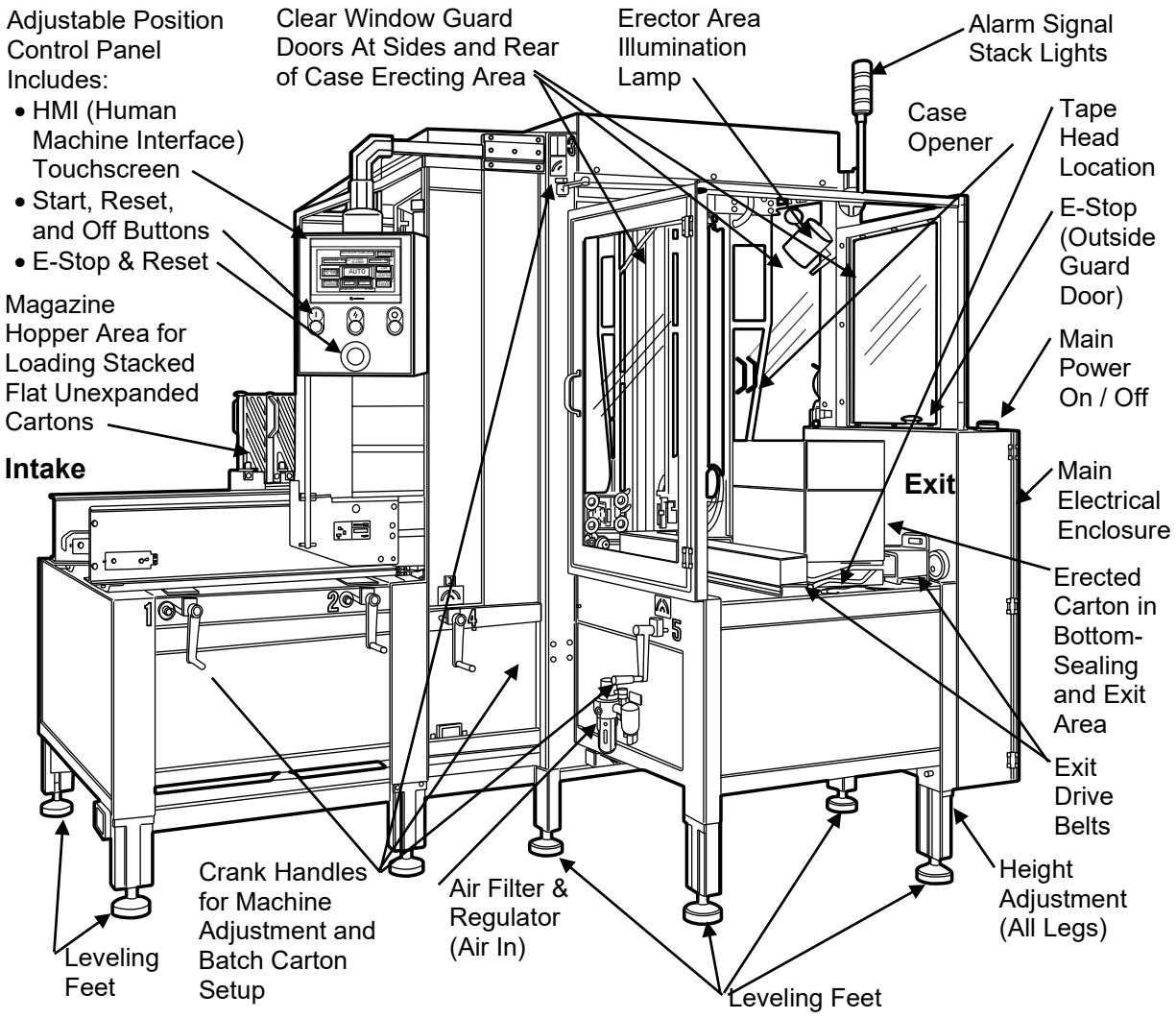

Cases erected by the ERX-15 follow a path from flat case blanks the magazine hopper in the Intake end and are pulled open and expanded and erected as they are pulled into the central area enclosed by clear guards. They are then redirected at a right angle and bottom tape sealed as they move out the Exit end with top open ready to move on to be filled and then top-sealed in operations after leaving the case erector.

The Case Erector can be thought of as having two major sections: one of which is the hopper or magazine where flat carton blanks are placed to be dispensed one-by-one as needed; and the other section is the enclosed case erecting and bottom-sealing section, in which the case opener swings the case open as the bottom flaps are folded closed and then sealed as the case exits.

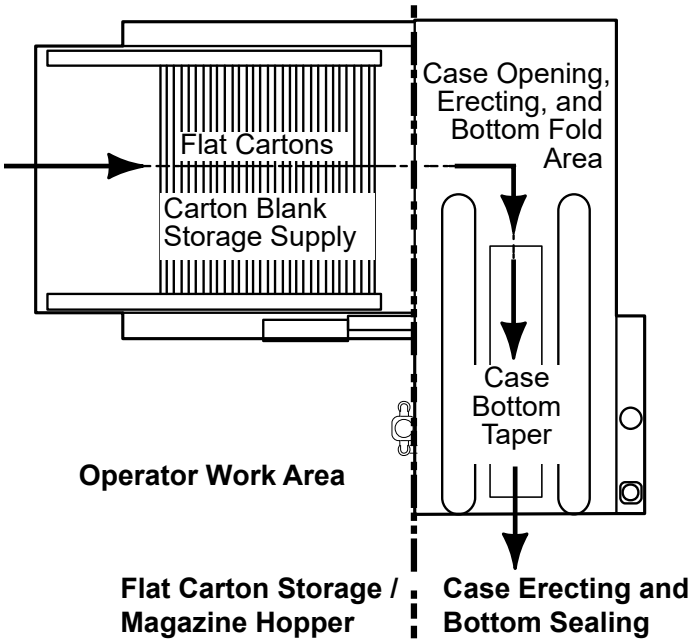

ERX-15 Case Erector Features & Specifications

ERX-15 Case Erector Features

- Touchscreen Human Interface control panel
- Powered case magazine hopper holds up to 200 cases
- Square case erection and transition area
- Quick and easy changeover requires no tools – 7 easy steps
- Low tape and low case alarm light
- E-Stop and interlock guarding for safety
- Heavy duty steel construction
- 2” tape head standard

ERX-15 Case Erector Specifications

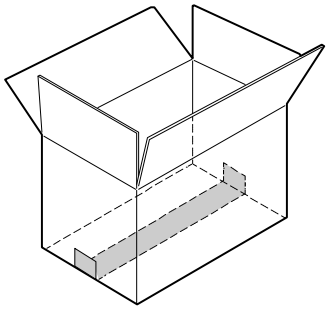

Speed Up to15 cases per minute

Case Types RSC RH

Flute Types B-flutes 3mm

Wall Types Single

Case Sealing 2” wide pressure sensitive tape, optional 3” wide

Case Hopper Capacity 150 - 200 cases (200 cases with B-flutes)

Machine Dimensions	Width (A)	Height (B)	Length (C)
ERX-15 Case Erector	82 in. 208 cm	82.8 in. 210 cm	94.3 in. 239.5 cm

Weight 2145 lbs. (975 kg)

Electrical Requirements 110V 50Hz/60Hz, 1φ (single phase)

Air Requirements 80 PSI @ 12 CFM

Box Specifications	Length(l)	Width (w)	Depth (h)
Minimum Box Size	7 in. 17.7 cm	5 in. 12.7 cm	5 in. 12.7 cm
Maximum Box Size	19.5 in. 49.5 cm	15.5 in. 39.3 cm	19.5 in. 49.5 cm

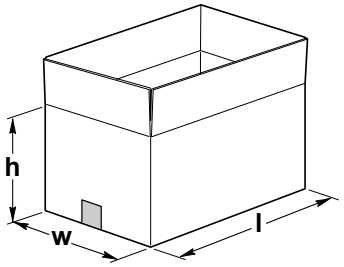

Tape Dimensions for Bottom Case Seal

Tape Width (L)

Nominal	L max.
2”	50 mm
3”	75 mm

Roll Maximum Diameter

Ø Nominal	O.D. max.
14”	356 mm
14”	356 mm

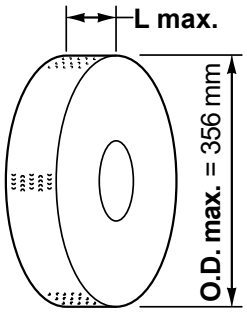

Options

3” tape head

Dimensions

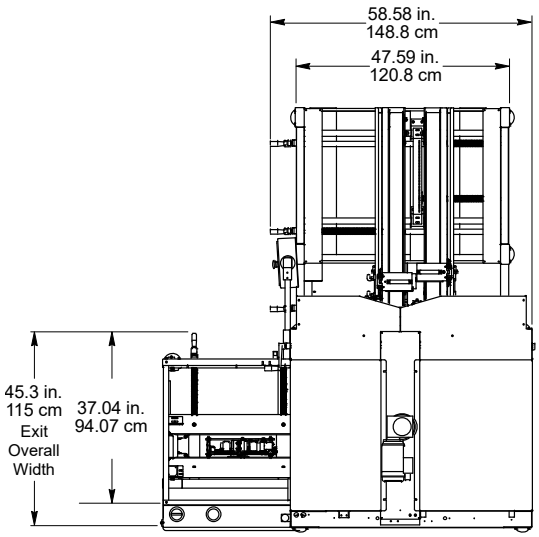

Note: Legs of the Case Erector may be lengthened or shortened by ±3.94 in. (±10 cm) as required to obtain desired conveyor height. Lengthening or shortening all legs increases or decreases all height dimensions from the dimensions shown by the same amount as the legs are lengthened or shortened.

Note: The Case Erector requires 39.4 inches (1m) clearance from any wall or obstruction for operator work space and for adjustment and maintenance.

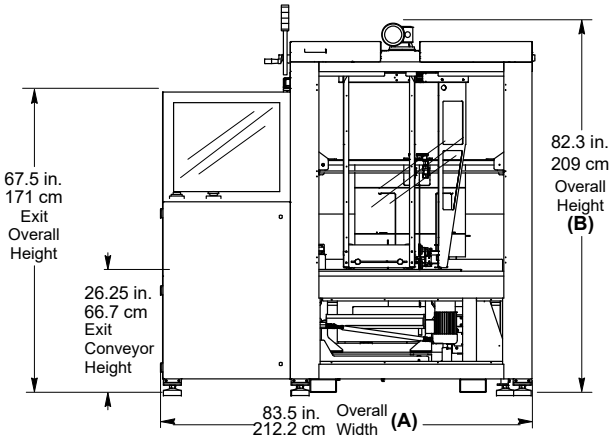

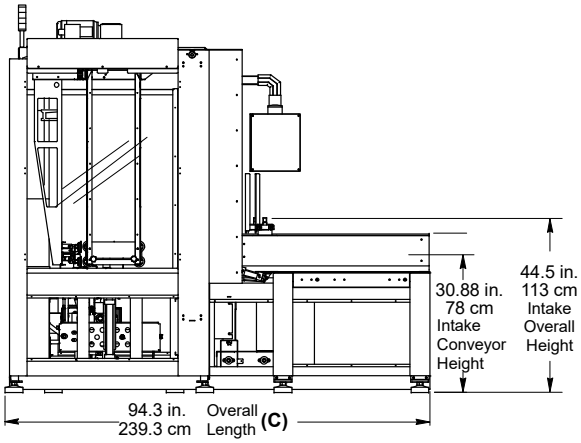

Dimensions are shown in inches and centimeters as indicated.

Electrical and Air Specifications

System Configuration	L1+N+PE (GROUND)
Nominal Power	0.45kW
Rated Current	4.1/2.0/1.9A
Rated Voltage	110V/220-240V
Rated Frequency	50/60Hz
Type of Current	AC single phase
Air Capacity	250 L/min
Pressure Setting	6 Kg/cm^2 (85 PSI)

Machine Serial Number

An identification label is affixed to each machine. The identification label displays the Model Number, Serial Number, Year of Manufacture, and Electrical Power Requirements.

Record the Serial Number and Year of Manufacture for future reference.

Note the electrical power characteristics indicated below the Model and Year. These specify the electrical power requirements of the Case Erector.

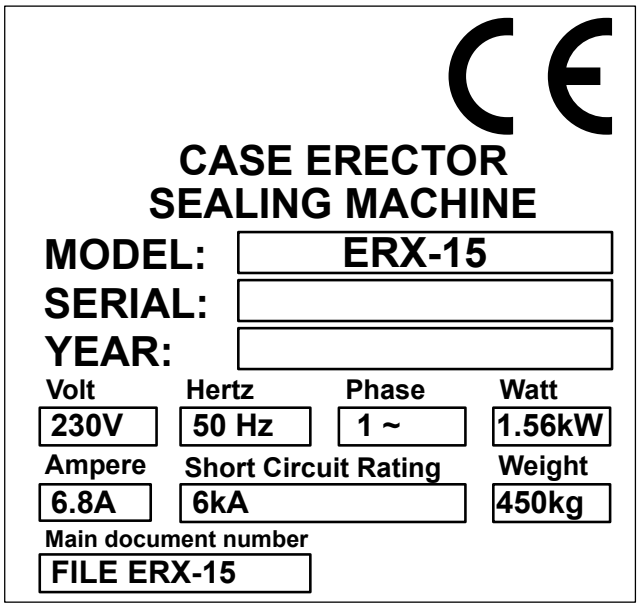

Typical Applications

Cleveland Equipment ERX-15 Automatic Case Erector

This case erector can be used for a wide range of applications where case size minimum and minimum are within the minimum and maximum case size parameters specified in the Box Specifications table of the ERX-15 Case Erector Specifications.

The case erector is particularly suited for moderate-sized boxes within the minimum and maximum sizes specified. Boxes are erected from flat case blanks, bottom-folded and tape-sealed, and delivered from the exit with the top open and ready to be filled and sealed.

Do NOT use the Case Erector with the following products types

- Explosive Products
- Flammable Products
- Hazardous Products
- Pharmaceuticals
- Agri-Foodstuffs
- Products that are heavier or larger than allowed by the machine specifications.

Do not operate the Case Erector in any extremely wet or oily environment that may exceed operating specifications. Install the Case Erector in a closed, well-ventilated area where there are no explosive or fire hazards. This equipment is designed for indoor operation in a typical clean, dry factory environment protected from rain and moisture. Do not spray water or wet-wipe the machine.

Make sure the Case Erector is **level** and there is sufficient clearance around the to allow personnel access for operation and maintenance of the Case Erector.

Unpacking

Thoroughly inspect the equipment and packaging immediately on arrival.

Carefully remove the outer protective shipping materials. Inspect the machine for any damage that may have occurred during transit. If goods are received short or in damaged condition, it is important that you notify the carrier's driver before they leave your company and insist on a notation of the loss or damage across the bill of lading. Otherwise no claim can be enforced against the transportation company. Please note that a copy of this document is attached to the outside of every crate.

If concealed loss or damage is discovered, notify your carrier at once and request, **insist**, on an inspection. This is absolutely necessary. A concealed damage report must be made within ten (10) days of delivery of shipment.

Unless you do this, the carrier will not entertain any claim for loss or damage. The agent will make an inspection and grant a concealed damage notation. If you give the transportation company a clear receipt for the goods that have been damaged or lost in transit, you do so at your own risk and expense.

All claims must be filled within five (5) months of the delivery date or the carrier will not accept them.

We are willing to assist you in every reasonable manner to help you collect claims for loss or damage. However, this willingness on Cleveland Equipment's part does not make Cleveland Equipment or its parent or related companies responsible for collections or claims or replacement of equipment damaged or lost in transit.

Loading and Unloading Instructions

- Use a forklift with adequate capacity to lift the machine from the pallet. (Forklift extensions may be required to repack equipment.)
- Forklift tubes are incorporated into the design of the case erector frame at the base of the case erecting chamber. The machine center of gravity is under the case erecting chamber.
- It is recommended to lift the case erector from the back side opposite the Intake side as shown in the following illustration. When lifting and moving the machine, take into consideration the entire machine weight, balance, and strength.
- Use shipping straps to restrain the case erector securely so it will not shift in transit.

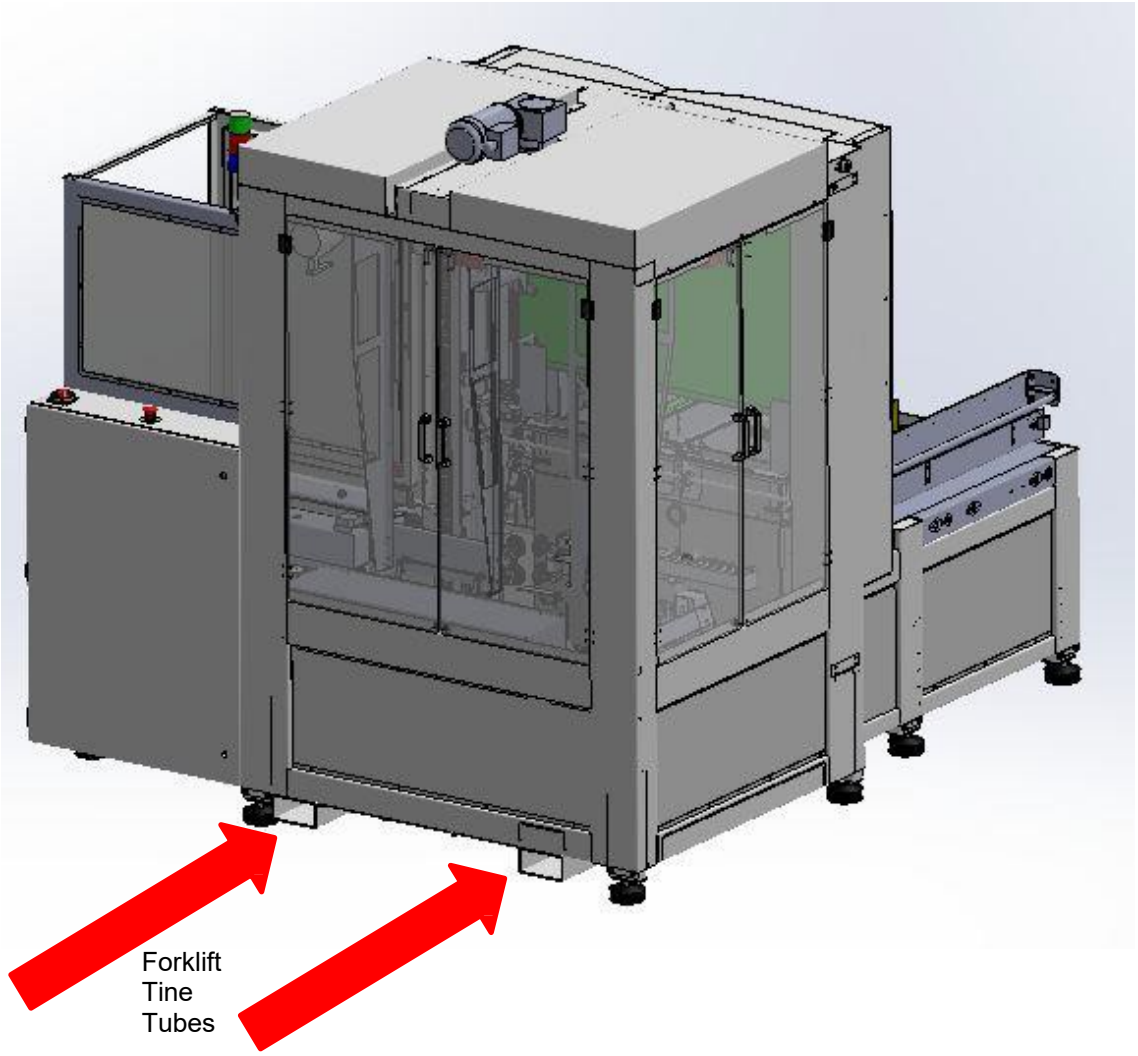

Do This

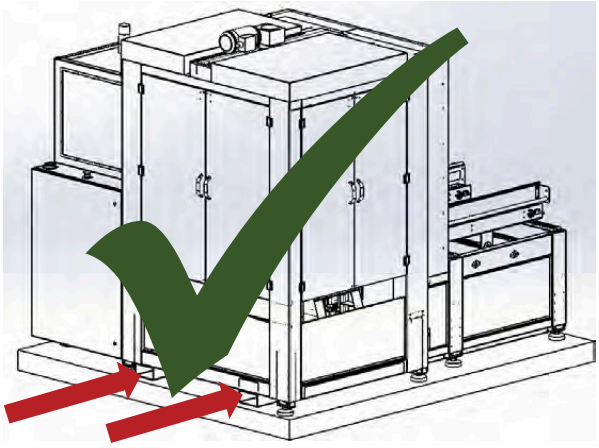

Do NOT Do This!

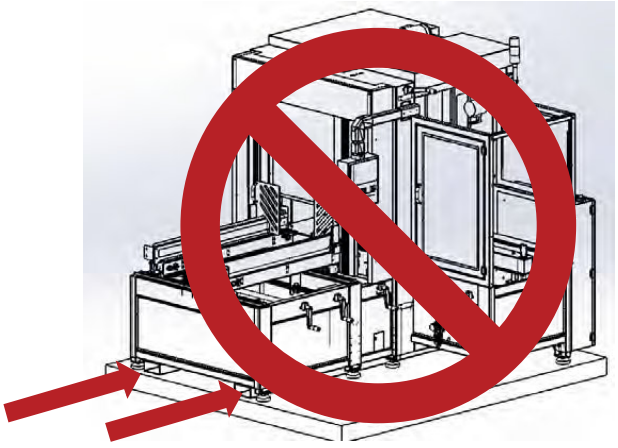

Installation

Remove the shipping plastic covering the case erector and lift it up, off the shipping pallet.

CAUTION! **The ERX-15 Case Erection System is heavy and a forklift is recommended to move the machine safely off the shipping pallet. See the illustration at the end of the previous section for location of tubes for forklift tines and recommended orientation for lifting. Use proper equipment when lifting the case erector and ensure it is secure and will not shift while being moved off the shipping pallet.**

Place the case erector in the desired location with the required electrical power source and air supply available. (See power requirements for the case erector in the Specifications table.) Make sure the electrical wiring is adequate to provide the required voltage. If the voltage provided is too low, the equipment will not operate correctly.

Selecting the proper location is one of the most important considerations for initial setup. When selecting the location, take into consideration the following factors.

1. Adequate clean air and power supply nearby? Power source must provide capacity that meets or exceeds machine requirements. A shorter ground wire is preferable.
2. Where is the case erector in relation to the power source? Source of air at required CFM flow and PSI pressure?
3. Where is the case erector in relation to any conveyors or pack tables necessary to move and fill formed cases? If applicable, in relation to a bundler and shrink tunnel? (Alignment with packaging line.)
4. Convenience for the operator.

If there is any doubt, get qualified assistance with your initial installation.

Location Requirements

When installing the case erector please be aware of the following considerations:

1. The surface on which it is located is flat and level.
2. Conveyor or packing table height.
3. Alignment with packaging line.

4. Avoid locating the case erector in an area that is too hot or too cold. Recommended ambient temperature range for operation of the case erector is between 32° F – 113° F (0° C – 45° C).

When the case erector is positioned in the operating location you will need access to:

1. Control panel and switches: On/Off switch, E-Stops, control panel.
2. Height and width adjustments.
3. Tape head. (To change tape roll when tape is used up.)

Avoid placing the case erector too close to a corner or a wall, as operators will need space around the machine in which to work and to perform adjustments and maintenance tasks. Be sure to allow sufficient space, 39.4 in. (1m), to open clear window guard doors completely.

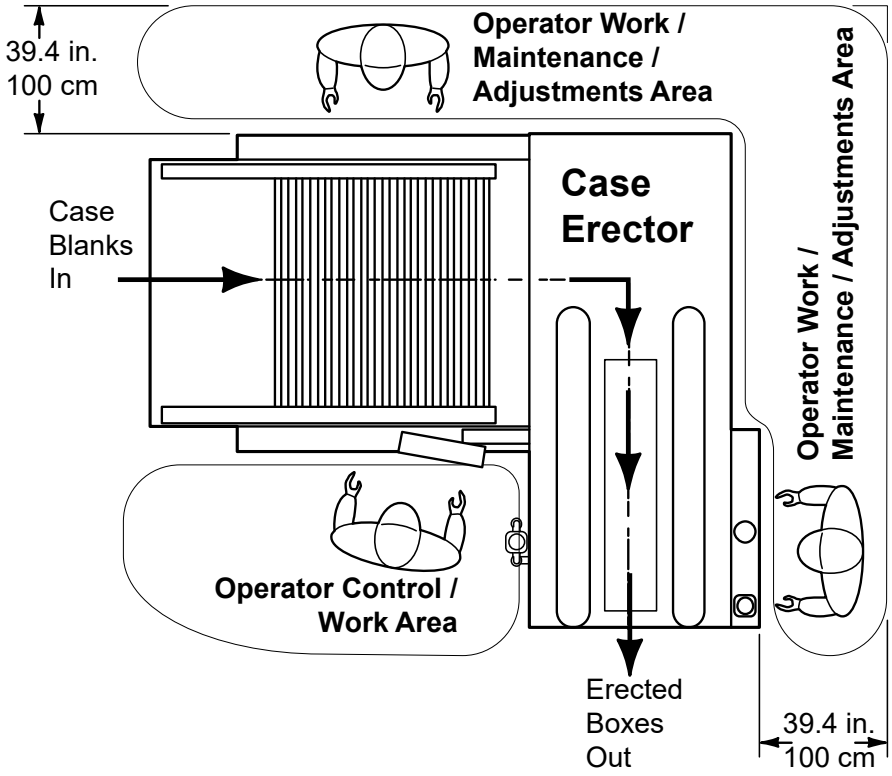

For most applications, a takeaway conveyor is at the exit of the case erector. Make provision for exiting erected cases. For example, a table where cases will be placed until they can be loaded or packed or similar accumulation area for erected cases.

Where the case erector is part of a longer packaging line, take into consideration the exit conveyor height in relation to adjacent machinery.

The case erector should be placed on flat, level floor so that it does not rock or move. We recommend that the machine be securely locked in place when used.

Move the case erector to its location. A forklift is recommended for moving the case erector.

CAUTION! **If the case erector must be lifted for moving, use proper equipment when lifting and moving it. A forklift is recommended to move the machine safely. See the illustration at the end of the previous section for location of tubes for forklift tines and recommended orientation for lifting. Use proper equipment when lifting the case erector and ensure it is secure and will not shift while being moved**

When the case erector has been moved to its location, adjust the leveling legs to level the case erector in its permanent location. There are ten leveling legs total, and each leg of the case erector is adjustable to allow height adjustment. The case erector must be lifted and supported while legs are extended or retracted for leveling.

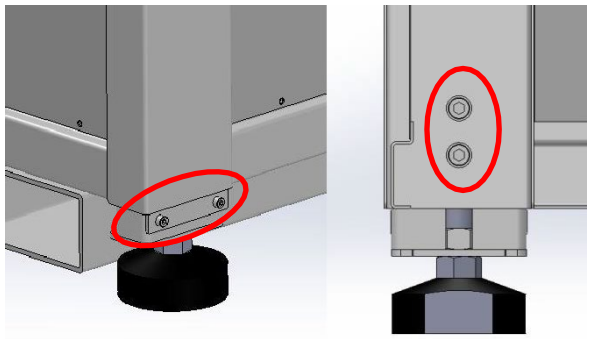

Height adjustment is from a minimum of 26.7 in. (68 cm) to a maximum of 34.7 in. (88 cm), for 8 in. (20 cm) adjustment total, at the output conveyor, in 2 in. (50 cm) increments. Graduated rules are provided on the leveling legs to indicate how far each leg is extended. Be sure to extend legs so the weight of the machine is distributed onto all ten legs.

Note: **When adjusting height to raise or lower the case erector, place a level across flat continuous surfaces at the top of the base and adjust the base to be level in both directions.**

Remove strapping intended to stabilize moving parts during transport

Look for and remove straps for shipping in the locations indicated in the following illustrations.

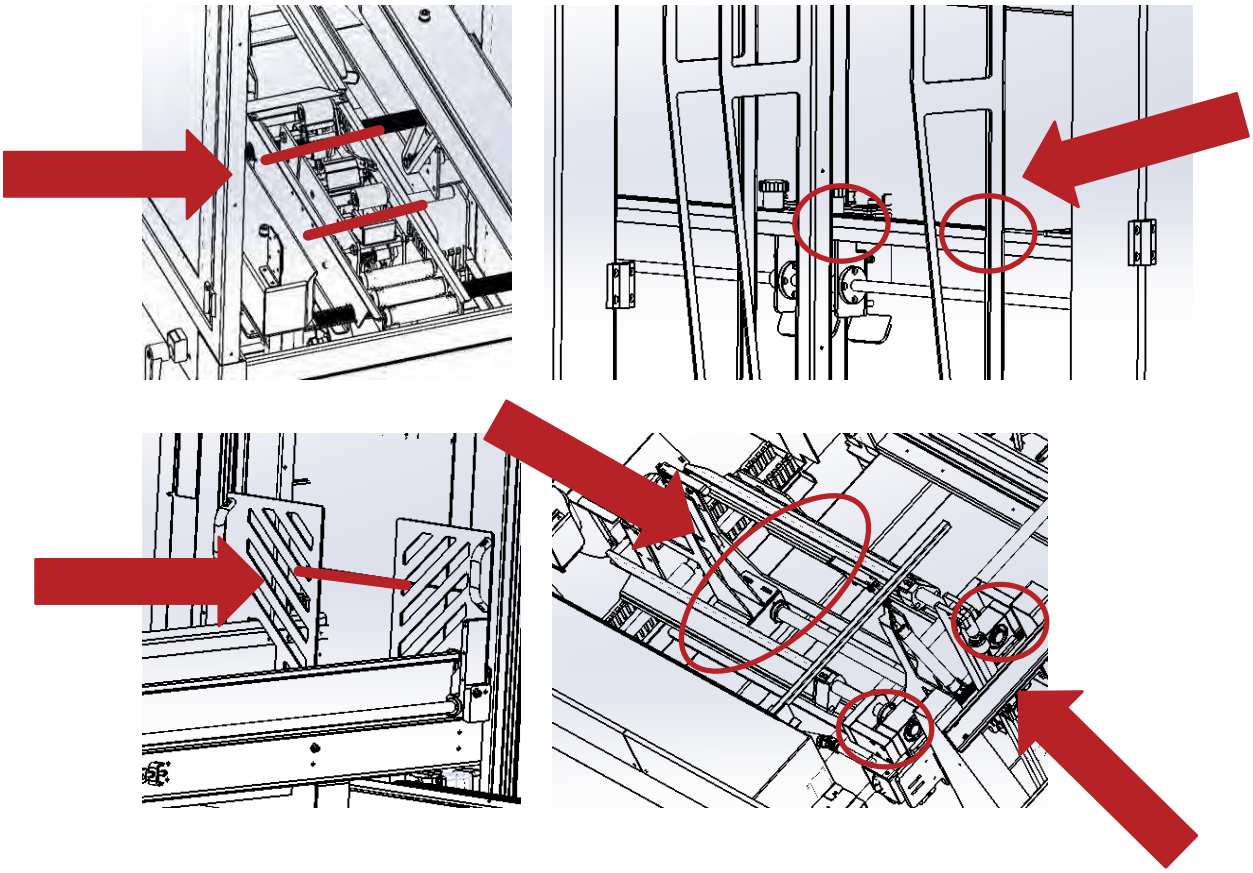

Attach the alarm signal light stack

The Case Erector is shipped with the alarm signal light stack removed to protect it from being damaged in transit. Attach the alarm signal light stack as shown in the following illustration.

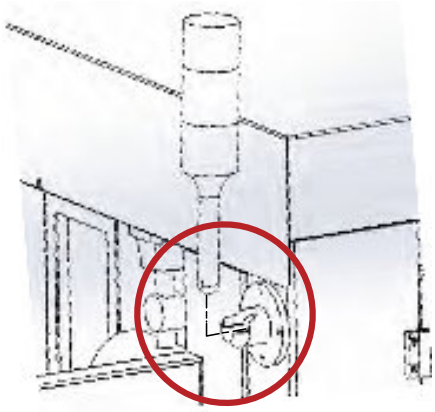

A power cord (with optional electrical plug) should be installed by a licensed electrician. Connect the air line to the regulator.

CAUTION! **Before operating, ensure the following.**

1. **All shipping ties are removed.**
2. **The interior of the case erector is clear of any shipping materials or other items.**
3. **All personnel are clear of the equipment.**
4. **Electrician has stated that all electrical work is complete.**
5. **Adjust all controls according to the recommended operating settings.**
6. **Air line is connected to the regulator and verify minimum supply of 80 PSI, 12 CFM**

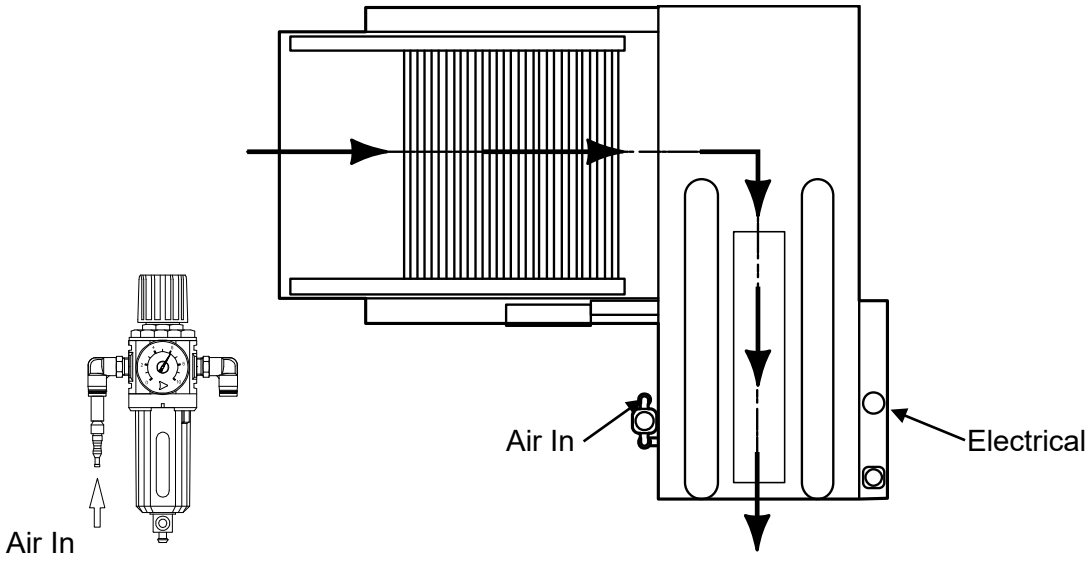

NOTE: **Do not stack carton stock or other items against the sides of the machine which could present interference or hazard to the operator or others, cause wear on exterior surfaces, or produce excessive noise through vibration. Do not stack items on the power cord.**

Refer to instructions in the Operation section for instructions to power up, operate, or shut down the machine.

Operation

Before operating the Case Erector, be familiar with the machine controls and where they are located.

Main Power On / Off Switch and E-Stop

1. **Main Power** — The main power switch is located on top of the main electrical cabinet enclosure, outside and to the right of the clear-window guard for the erected carton exit area.

2. **E-Stop** — A red Emergency Stop (E-Stop) is also located on top of the main electrical cabinet enclosure, on the same surface and behind or to the right of the main power switch. There is also an E-Stop on the adjustable-position control panel, centered near the bottom below the HMI Touchscreen and Start, Reset, and Stop buttons.

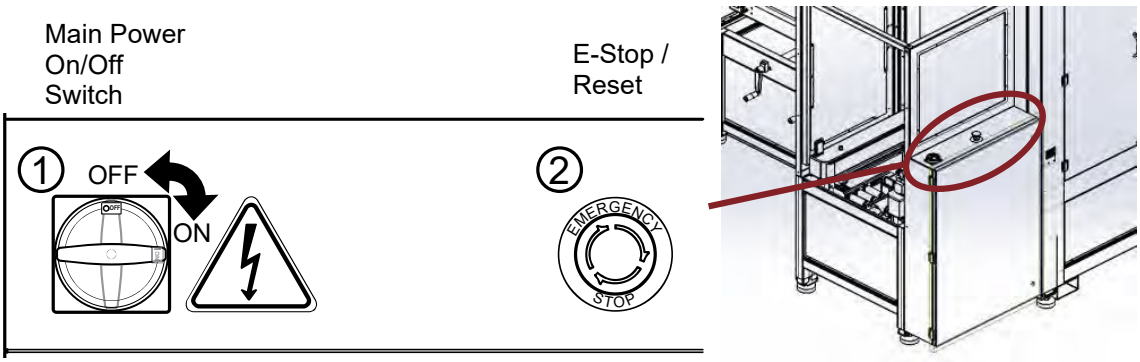

CAUTION! **When power is turned on keep clear of moving parts.**

NOTE: **In the event of an emergency, press in the large, red, mushroom-shaped E-Stop button to bring the system to a halt.**

NOTE: **When turned on from a cold start, the machine may require up to 2 to 3 minutes for the motor to warm up to full speed.**

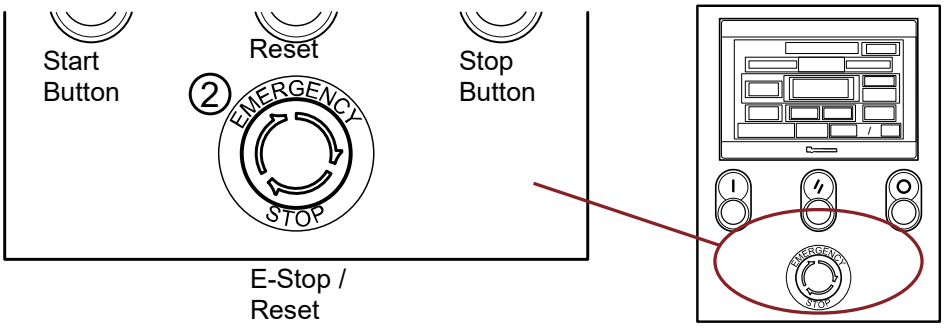

Control Panel

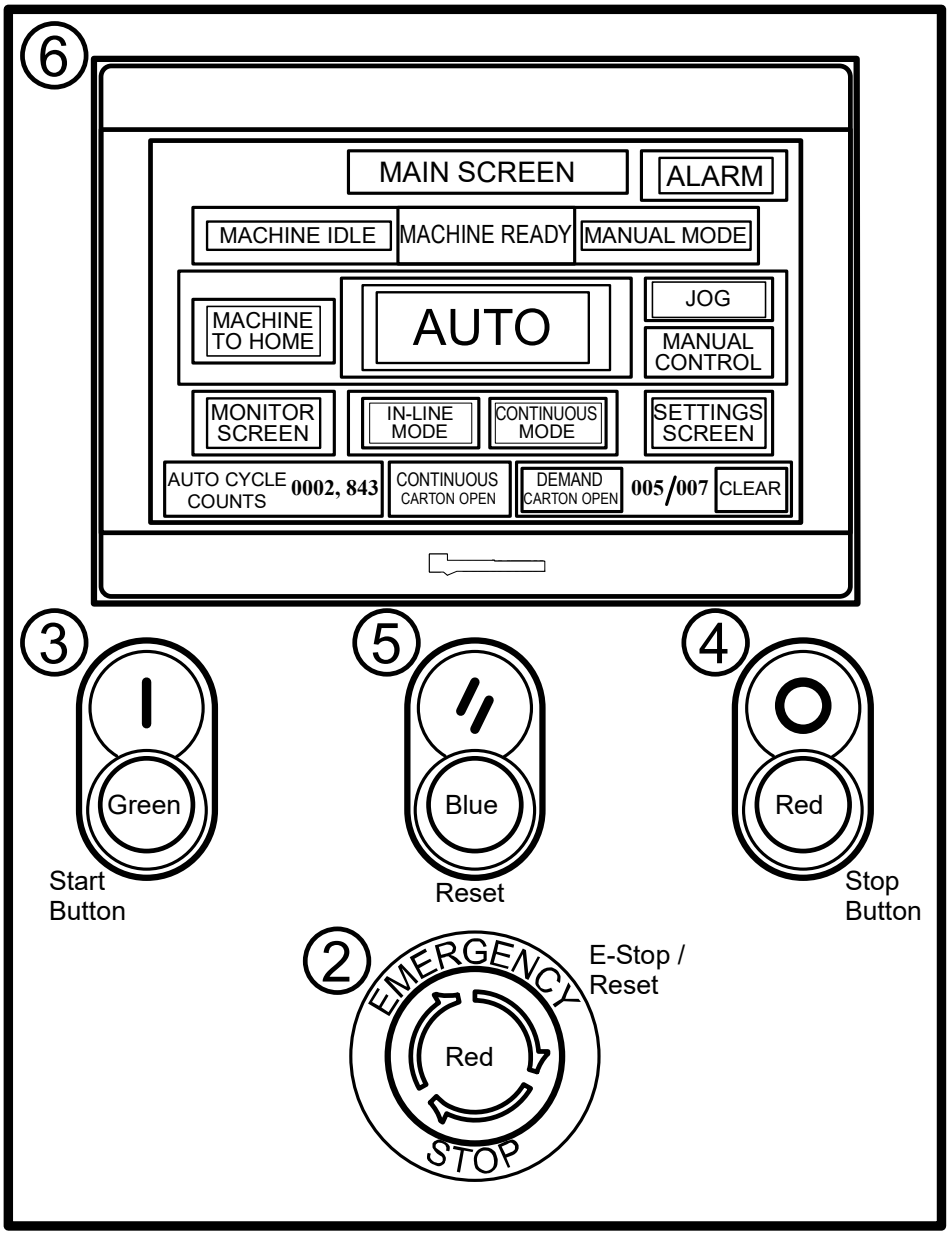

3. **Start** — When the case erector has been set up and programmed for a case size configuration and the desired number of flat cases have been loaded into the magazine hopper, press the green Start button to start the batch of cases to be erected.

4. **Stop** — To stop the batch of cases currently running, press the red Stop button.

5. **Reset** – To reset the batch if it has been stopped, press the blue Reset button.

6. **HMI Touchscreen** – The HMI (Human Machine Interface) Touchscreen provides access to controls, status information, and programable settings of the case erector.

Main Screen

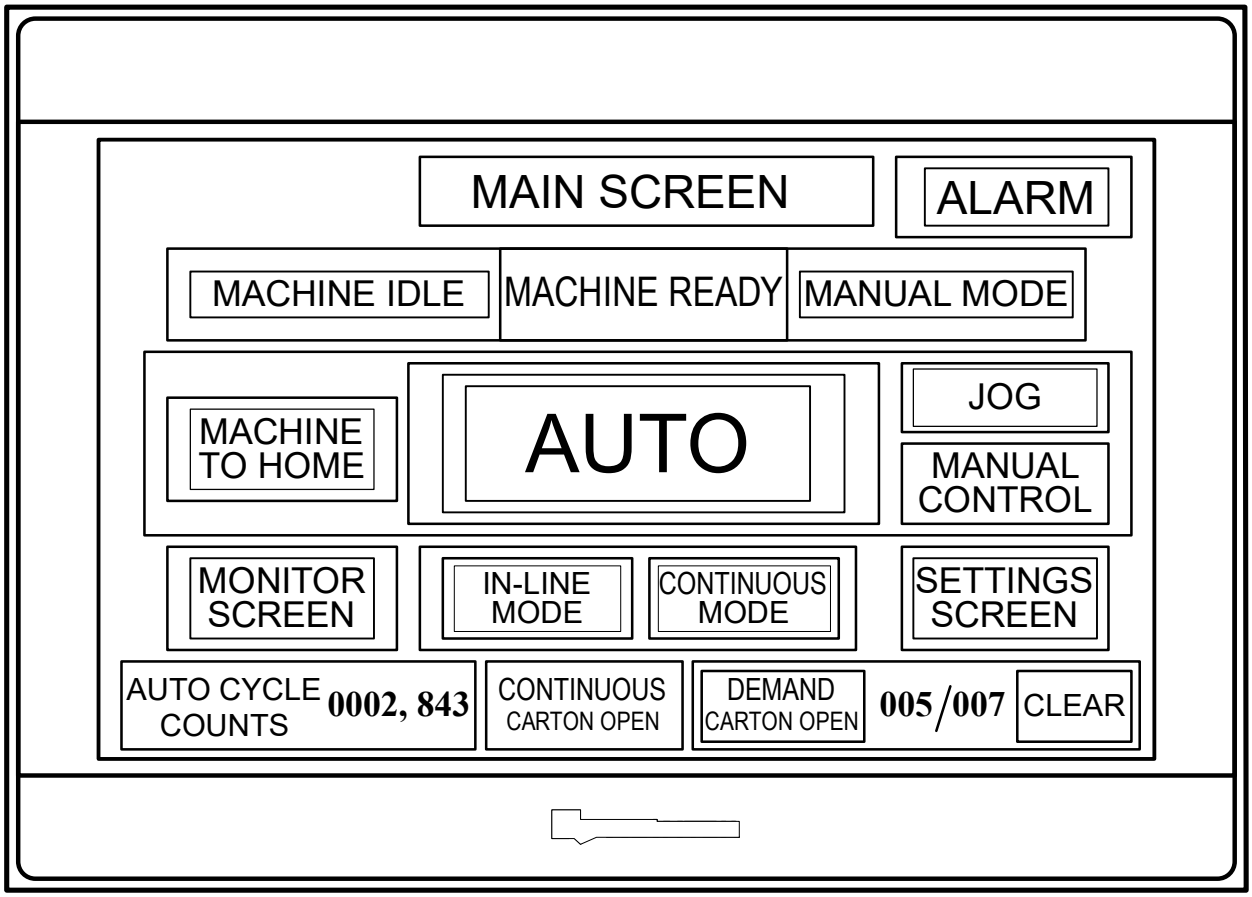



WARNING: Unless otherwise specifically stated, before performing any adjustments, maintenance, or repairs, power off the system, disable the power source, and do the same for all connected equipment consistent with logout/tagout best practices.
See https://www.osha.gov/control-hazardous-energy or scan the QR code at right using the camera app on your mobile device.

When operating the case erector, if an overload condition occurs, the circuit breaker will trip to break the circuit. There are two options to reset the machine.

- Press the Start button to reset the machine, or
- The machine will automatically reset after 60 seconds.

Case Dimensions — Case Blank to Finished Carton

To begin setup for each run of cases, you will need to know the desired finished size dimensions of the case. The dimensions of the finished cases relate directly to the case blanks as shown in the following illustration. Have a case blank available to use while making machine settings.

CAUTION! Press the E-Stop while making machine settings.

Finished Case Dimensions

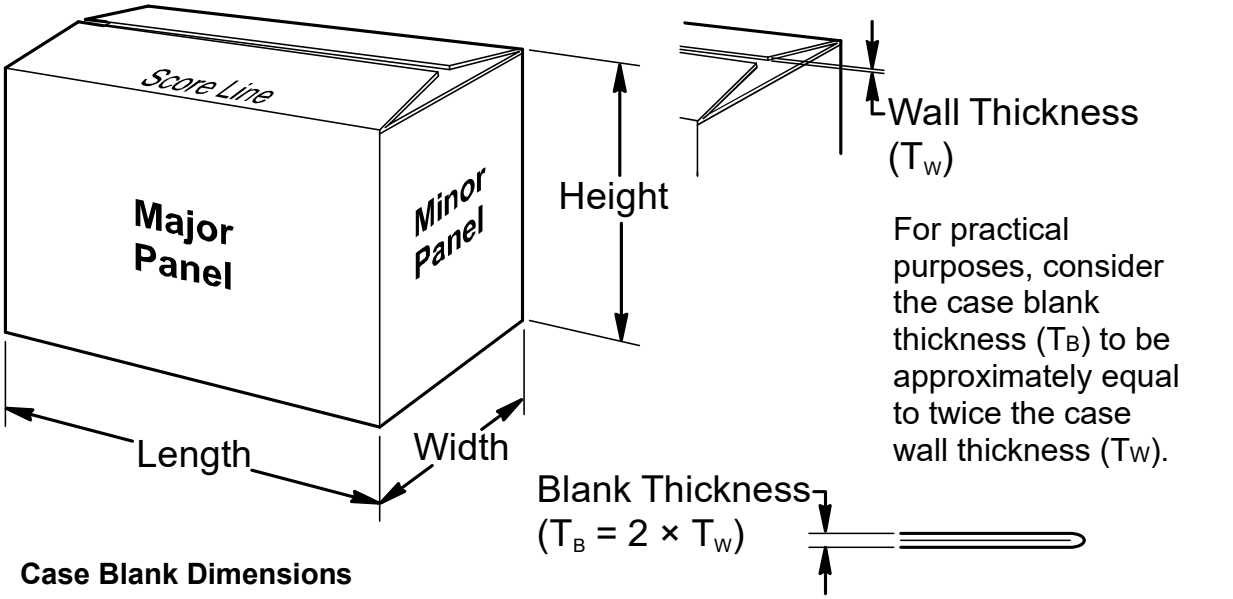

Case Blank Dimensions

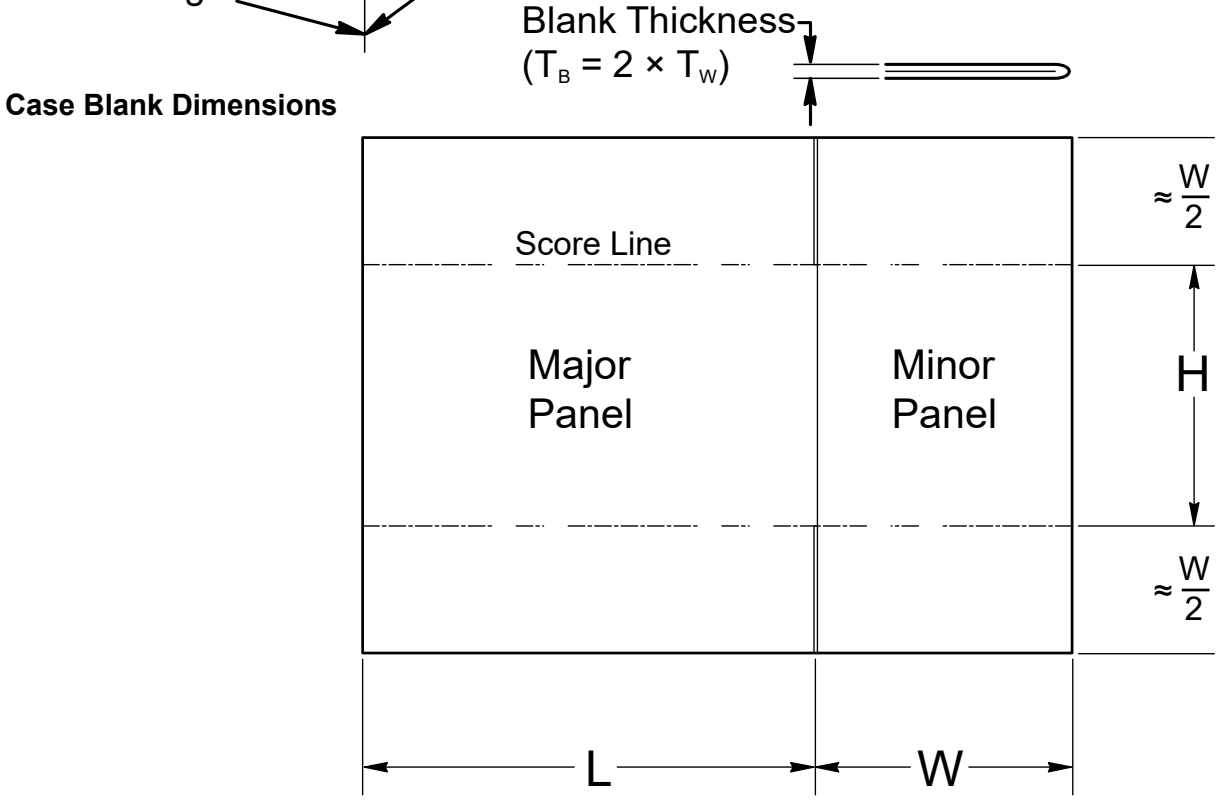

Hand Cranks and Locations for Machine Adjustments

Hand cranks for making adjustments for dimensional changes in case sizes are on the outside of the case erector and are labeled with numbers 1 through 5. Adjustments 6 and 7 are inside the case erector enclosure and are not labeled with numbers. The following illustration shows the locations of the five hand cranks.

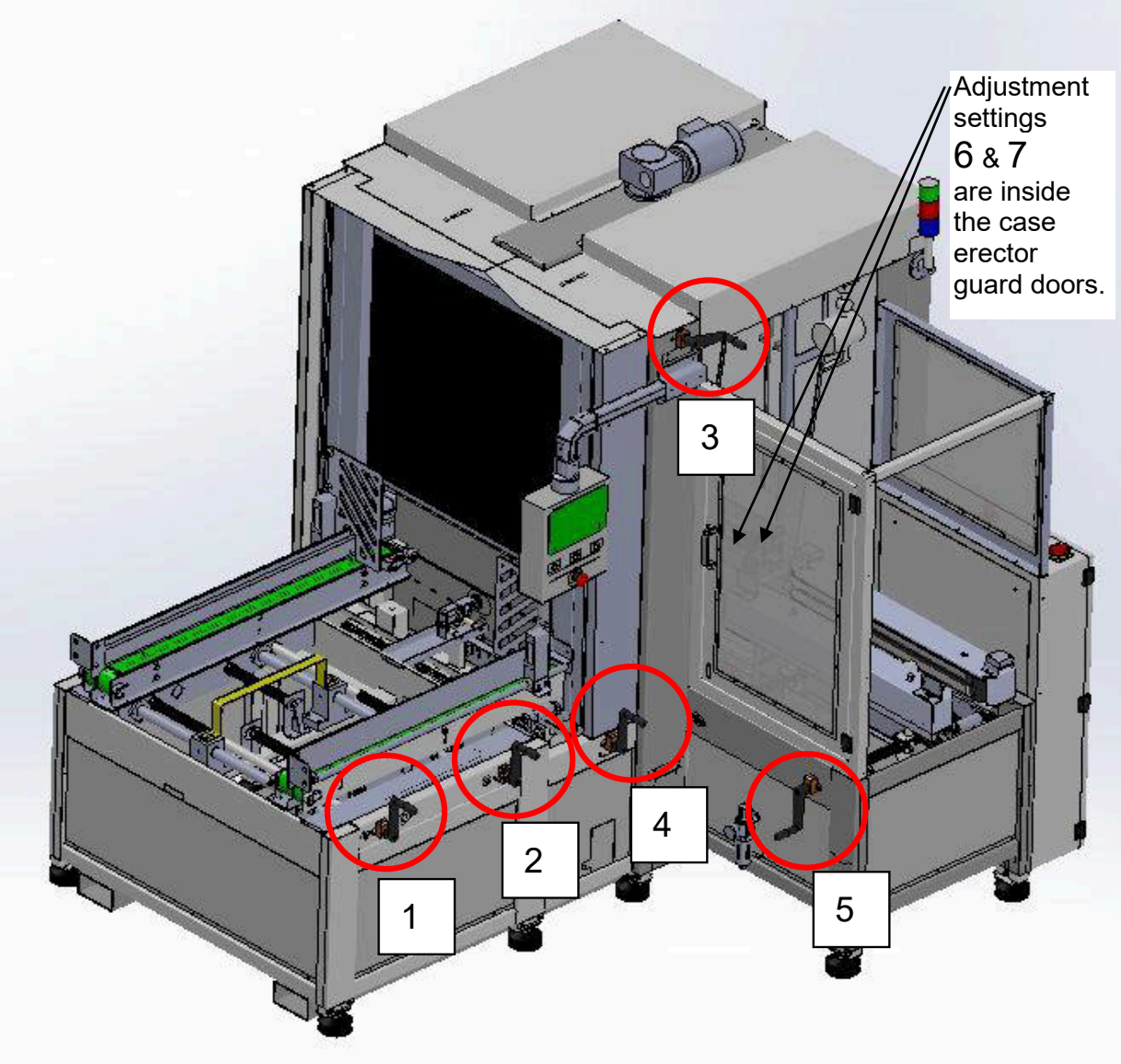

Machine Adjustments

Following is a short outline of how the seven adjustments (five crank handle adjustments and two internal adjustments) relate to the dimensions of the case blank and resulting erected case:

Adjustment 1: Magazine Hopper adjustment for Case Width; the width of the case minor panel, W.

Adjustment 2: Magazine Hopper adjustment for Case Length; the length of the case major panel, L.

Adjustment 3: Top pusher adjustment for Case Height plus the Case Width; the overall height of the case blank. W/2 + H + W/2, or simply H + W.

Adjustment 4: Box Baseline adjustment for Half of the Case Width; the width of a case flap or W/2.

Adjustment 5: Taper conveyor width adjustment for Case Width; the width of the case minor panel, W.

Adjustment 6: The sixth adjustment relates to the Case Length and Case Width. It will be to adjust the location of suction cups on the case opener and where they adhere to the case blank to swing it out and open, to distribute the area of the box supported by each suction cup.

Adjustment 7: The final adjustment relates to the overall height and thickness of the case blank. This adjustment is required to make sure one, and only one, case blank is pushed into the case erector area for each cycle.

Be familiar with the adjustment cranks and how they move the parts of the machinery they are responsible for adjusting. Be aware that it is possible to adjust the push-down bracket and sensor mounting plate for magazine low/magazine empty in a way that the pushdown bracket bar can crash into sensor mounting plates resulting in damage to machine parts.



CAUTION: Before making the crank handle adjustments (1, 2, 3 & 4) it is important to look at the push-down brackets that will be positioned in Adjustment 7. Before finalizing the crank handle adjustments, make sure brackets are moved inward far enough where intake belts will not crash against them while adjusting intake belt width and alignment using the crank handles.

Taking care to inspect interaction of machine parts to verify that they will not interfere with or crash against each other before cycling each step can help prevent incurring repair expenses from broken or damaged parts.

Check to make sure the pushdown bracket bar will not crash into sensor brackets.

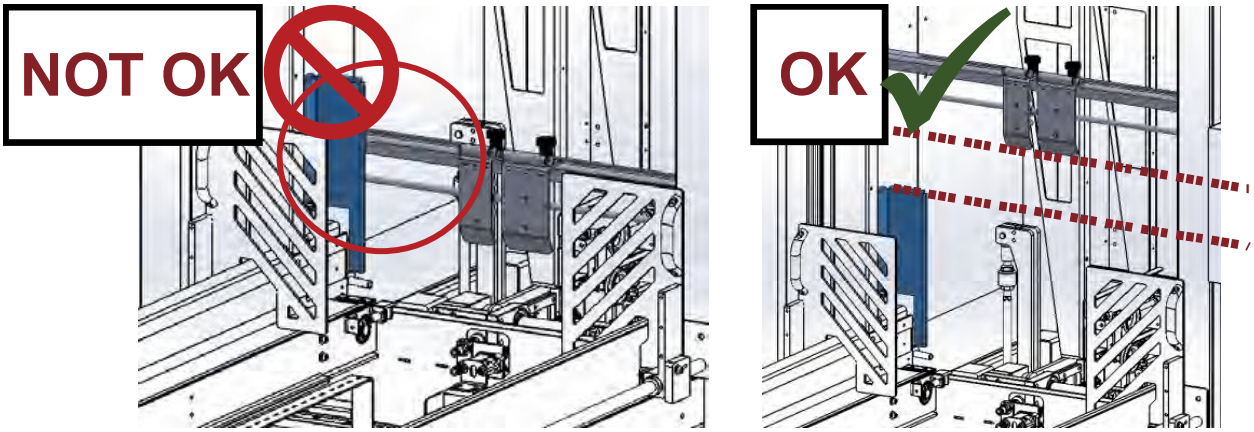

Check to make sure magazine belts and pusher paddles will not crash into sensor brackets.

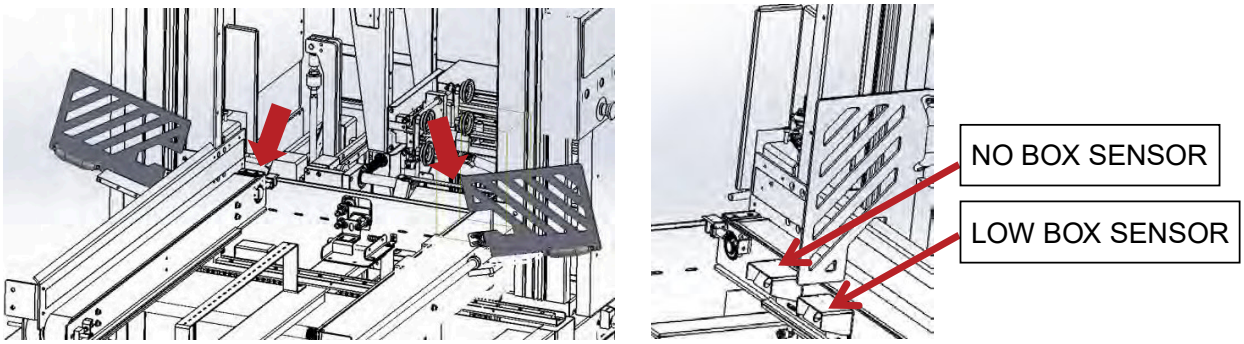

Making Initial Settings

VIDEO: ERX-15 Case Erector – Full Settings and Adjustments
To see a video that shows all the above adjustments for setting up the ERX-15 Case Erector and erecting a batch of cases, click this link: https://www.youtube.com/watch?v=u9cHv_HBiXI or scan the QR code at right using the camera app on your mobile device and follow the link.

Turn on power to the machine and then press Reset and touch Return To Home on the touch screen to make sure the machine is in the Home position. Then press the E-Stop button to make sure it is activated.

CAUTION! Press the E-Stop while making machine settings.

There is an E-Stop located on top of the main electrical cabinet enclosure, on the same surface and behind or to the right of the main power switch; and there is an E-Stop on the Control Panel, centered near the bottom below the HMI Touchscreen and Start, Reset, and Stop buttons.

VIDEO: ERX-15 Case Erector Box Width Adjustment

To see a video to guide you through this adjustment for setting up the ERX-15 for the case blank width, click this link: https://www.youtube.com/watch?v=Ix6dONOnPGw or scan the QR code at right using the camera app on your mobile device.

1. Place a case blank on top of the intake belts in the magazine hopper area. Place the box so that it appears upside-down from the intake end of the belt and so the minor panel is on top to the left and the major panel is to the right. (On the underside of the case, these will be reversed.)

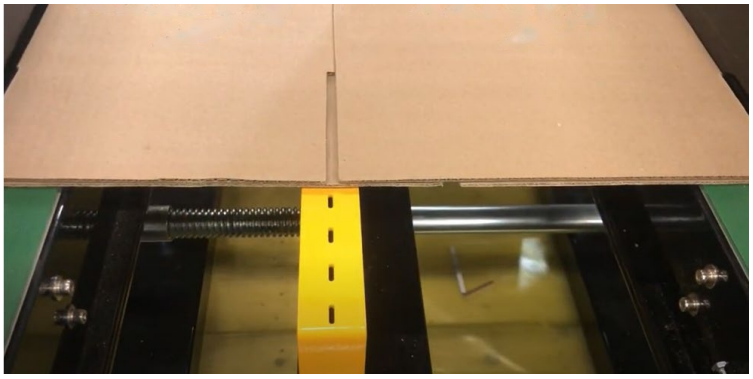

2. Use the hand cranks labeled 1 and 2 as required to position the case blank to fit between the guide rails with the vertical score line separating the major and minor panels in alignment with the dotted line along the yellow support bracket.
   - Hand crank 1 adjusts the guide rails for the width of the minor panel, W.
   - Hand crank 2 adjusts the guide rails for the width of the major panel, L.

3. When the guide rails touch the box and the box is snug, loosen each of the two crank handles out half a turn to provide adequate clearance of 1/32” to 1/16” to each side.

VIDEO: ERX-15 Case Erector Box Height Adjustment

To see a video to guide you through this adjustment for setting up the ERX-15 for the case blank height, click this link: https://www.youtube.com/watch?v=VjSQN4sUhLs&list=PLw2fFM1Tj1XVlqawAzk0PZmhsFO16VsZo&index=2

Or scan the QR code at right using the camera app on your mobile device.

1. To adjust for the height of the box, place the box in front of the hopper.



2. Adjust hand crank labeled 3 down or up until the top of the box meets the dashed line striations on the push-down bracket.

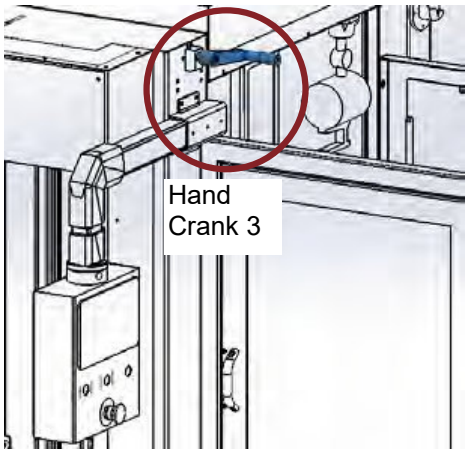

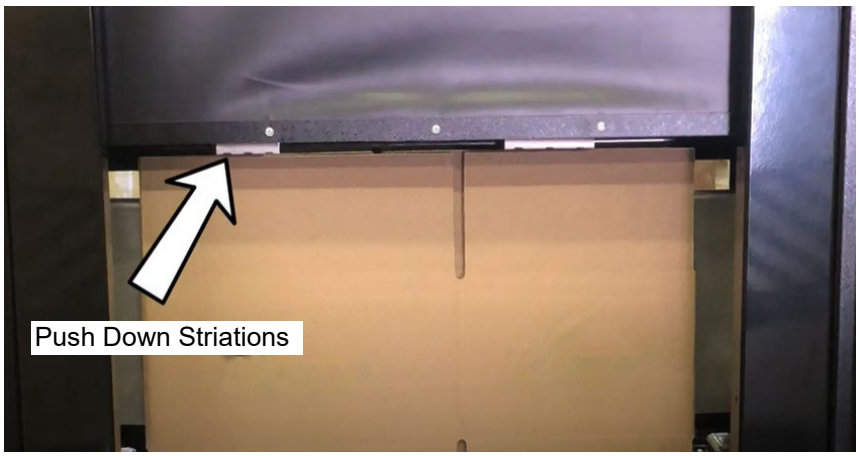

Note: **Take care when adjusting the push down brackets that the sensor plates of the magazine will not interfere with the push down brackets or this could result in a condition that could damage parts.**

VIDEO: ERX-15 Case Erector Staging Area Adjustment
To see a video to guide you through this adjustment for setting up the staging area adjustment, click this link: https://www.youtube.com/watch?v=vTluezBxdG8 or scan the QR code at right using the camera app on your mobile device.

1. Open the guard door temporarily to access the staging area.

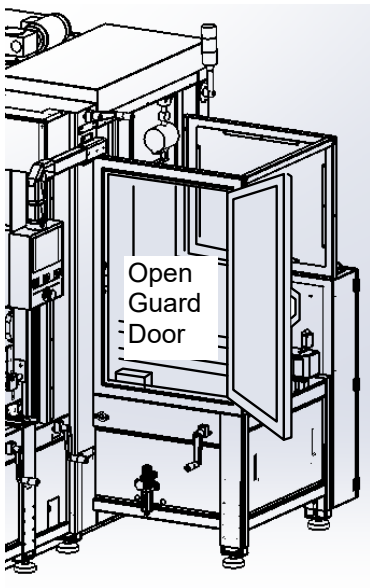

Note: **When the guard door to the staging area is open, the safety interlock switch is activated. The door must be closed after making adjustments in the staging area to return the machine to normal operation.**

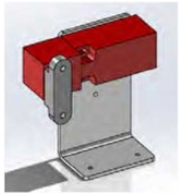

2. Place a case blank in the staging area. Stand the case blank at the rear on

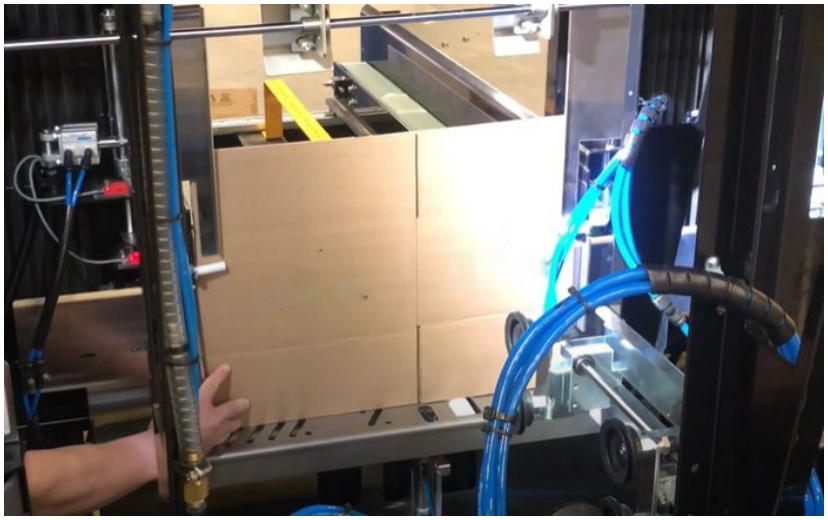

3. Adjust hand crank 4 up or down until the scored line on the box matches the dashed line on the back or the staging area.

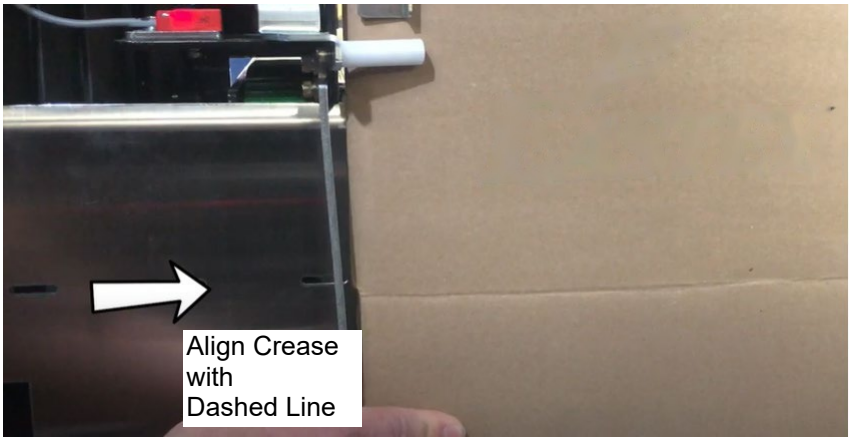

VIDEO: ERX-15 Case Erector Push-Down Bracket Adjustment
To see a video to guide you through this adjustment of the height of the push-down bracket, click this link: https://www.youtube.com/watch?v=N34moVlosw8 or scan the QR code at right using the camera app on your mobile device.

1. With the case blank still in position for the staging area adjustment above, loosen the knob handles on the push-down paddles if necessary.

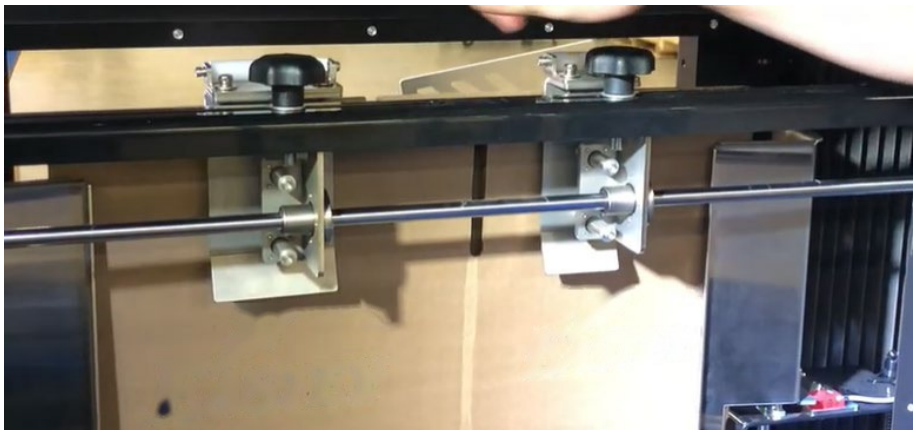

2. Position the push-down paddles so they are about a third of the way in on each side of the case blank, so they will push down on the case blank evenly.

3. Retighten the knob handles to secure the push-down paddles in place.

VIDEO: ERX-15 Case Erector Case Holdback Pin Alignment
To see a video to guide you through adjustment for alignment of the case holdback pin, click this link: https://www.youtube.com/watch?v=5cTzmXwu9DA or scan the QR code at right using the camera app on your mobile device.

The pin in the bottom plate below the case blank is instrumental in the opening and expanding the blank as it is being erected. This pin holds back the trailing corner of the case blank as the suction cups pull the leading sides of the case blank out, expanding and forming the case. The pin must align with the slot in the bottom of the case blank separating the bottom flaps for the leading sides.

1. With the case blank still in position in the staging area for the adjustments described above, adjust hand cranks labeled 1 and 2 to move the case blank to the left or right until the pin is in the proper position, as shown below.



   - Hand crank 1 adjusts the guide rails for the width of the minor panel, W.
   - Hand crank 2 adjusts the guide rails for the width of the major panel, L.

2. Be aware these adjustments use the same crank handles used to adjust the magazine hopper for case blank size. For case blanks in the magazine hopper, when the guide rails touch the box and the box is snug, loosen each of the two crank handles only slightly — half a turn or less to provide adequate clearance of 1/32” to 1/16” to each side.

VIDEO: ERX-15 Case Erector Suction Cup Adjustment

To see a video to guide you through adjustment of the suction cups, click this link: https://i.ytimg.com/an_webp/aCLeCY7mekY/mqdefault_6s.webp?du=3000&sqp=CNb5_PwF&rs=AOn4CLAq8MZWvpwhqsDfpS_CLcA1LYpT1A or scan the QR code at right using the camera app on your mobile device.

1. Manually open the case blank, forming it so the box sides open to a 90° angle.

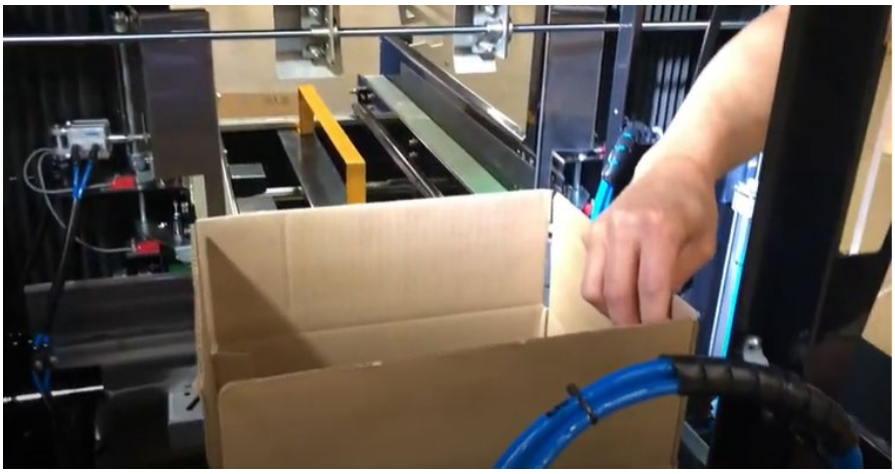

2. Place the box in the case-expansion area with sides against the suction cups.



3. Suction cups can be repositioned by loosening the handles on the outside of the bracket and then moving the set of suction cups.

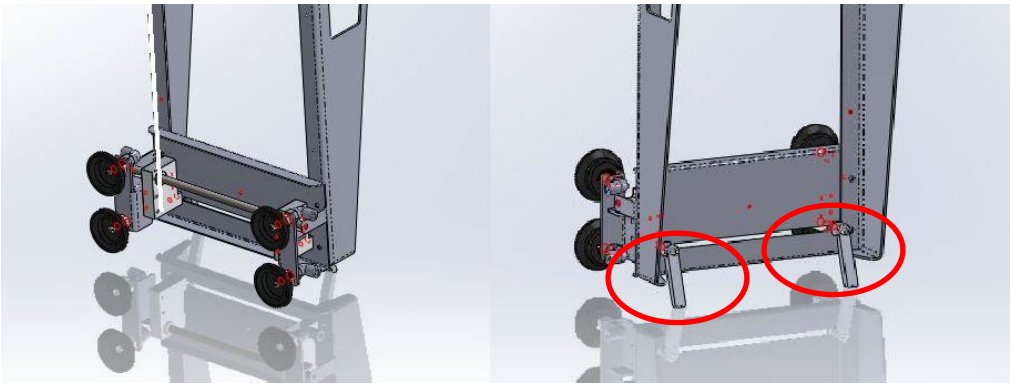

4. Position the suction cups so the weight of each carton will be distributed evenly by each pair of cups. Space the cups at regular intervals so that each pair of suction cups is at about $^{1}/_{3}$ of the width of the panel from the nearest edge or crease.

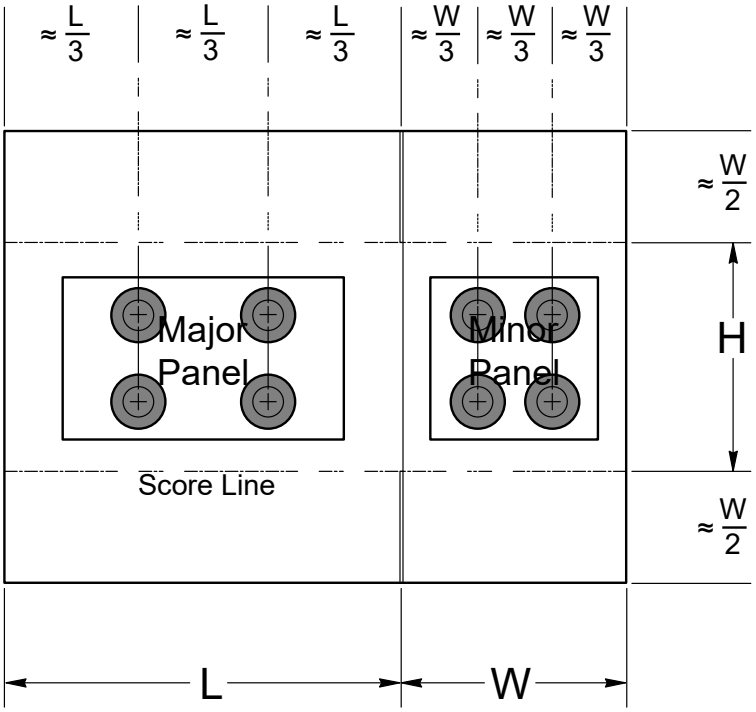

5. When the suction cups are positioned correctly, retighten handles to secure the suction cups in position.

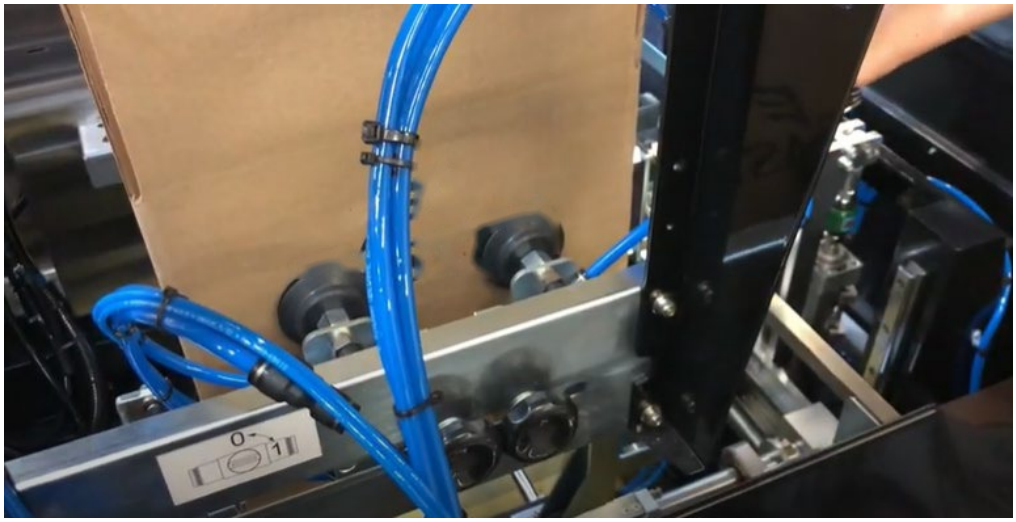

Note: **When positioning the suction cups take care to make sure the suction cup will not interfere with the sensor plate of the magazine when swinging back to pull the next case blank.**

For cases with one or both panels too small for both pairs of suction cups, use only the inner pair of suction cups, and center the single pair of suction cups on the case panel.

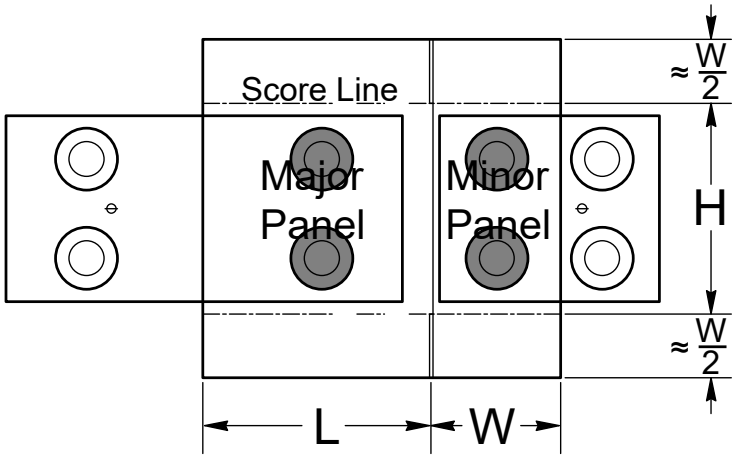

Position unused suction cups to the outside of case panels and retighten positioning handles of all suction cups to secure them in position.



Shut off the valve to the unused suction cups.



The valve label placed on the case expander crossbeam shows the valve position for Open (1) or Closed (0).

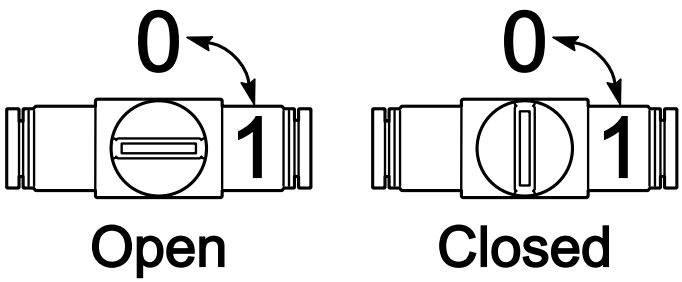

VIDEO: ERX-15 Case Erector Exit Belt Width Adjustment
To see a video to guide you through adjustment of the case erector exit belt width, click this link: https://www.youtube.com/watch?v=Ix6dONOnPGw or scan the QR code at right using the camera app on your mobile device.

1. Manually form a box from a case blank, expanding it to rectangular form and folding in the bottom flaps.

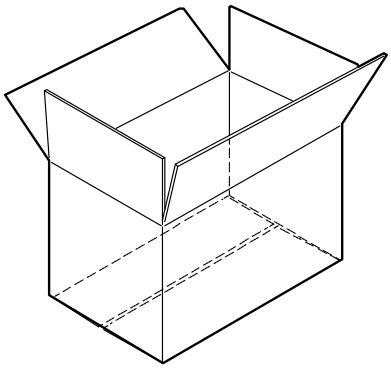

2. Place the formed box in the exit conveyor area.

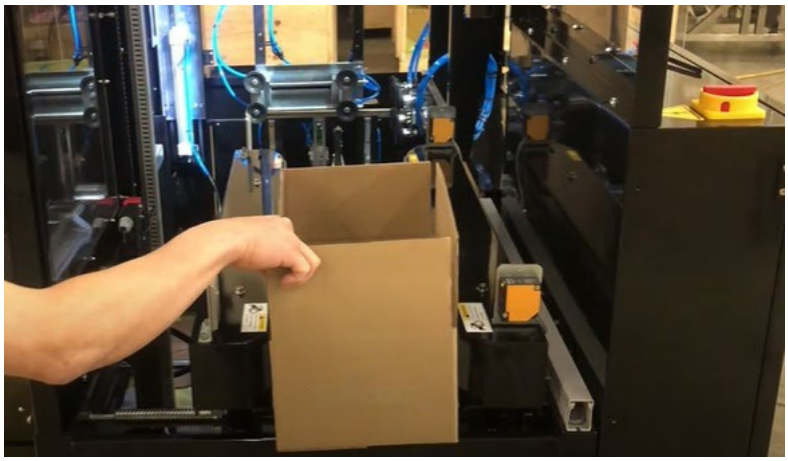

3. Adjust the hand crank 5 out or in as necessary to fit the case so the belts are snug against the box. Once the belts are snug, remove the box and tighten the hand crank 5 half a turn.

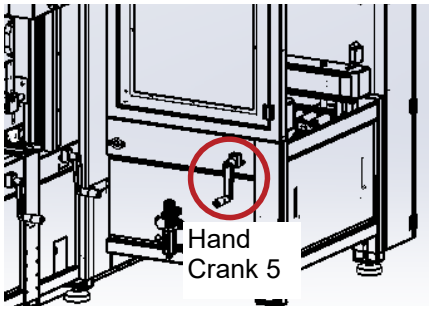

VIDEO: ERX-15 Case Erector Loading and Threading the Tape Cartridge

To see a video to guide you through threading tape in the case erector tape cartridge, click this link: https://www.youtube.com/watch?v=OR0Nct4fz3k or scan the QR code at right using the camera app on your mobile device.

Loading the Tape Cartridges

Turn the main power switch to “Off” and disconnect the power.

CAUTION! **To avoid personal injury, remove the tape cartridge before loading tape.**

When handling the tape cartridge be careful to avoid contact with the tape cutting blade.

After the taping cartridge has been removed push the tape roll onto the tape core assembly.

NOTE: **Make sure the tape roll is pushed all the way on the spindle assembly.**

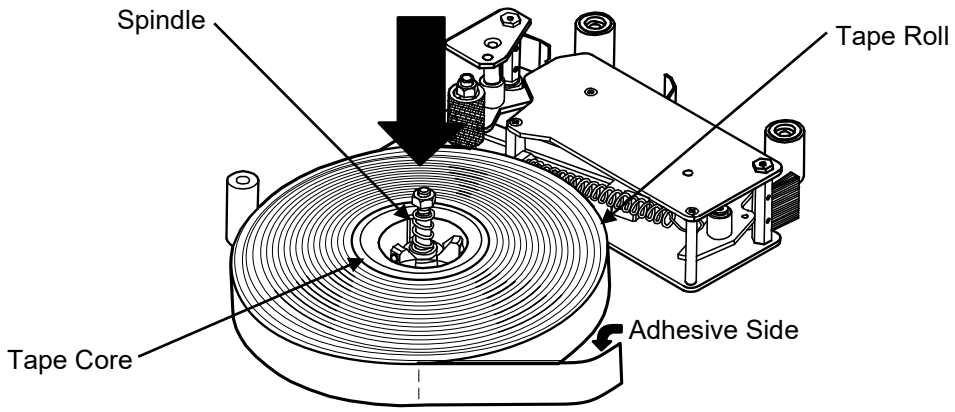

Check Tension

Check the tape for correct tension. Tighten or loosen the tape core holder to adjust tension.

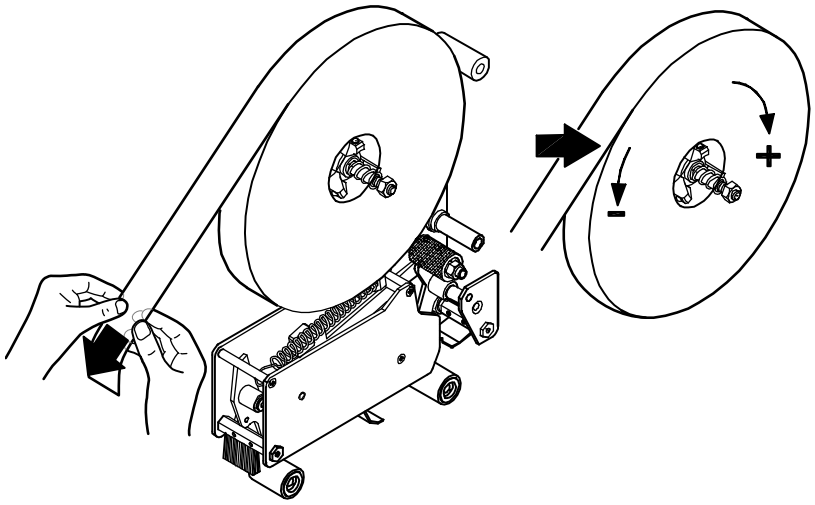

Thread Tape

Carefully thread the new tape through the rollers in the tape head as shown in the applicable diagram in the Tape Head User Guide provided with the tape head.

The following diagram shows the path for the tape in a typical tape head used with the ERX-15 Case Taper.

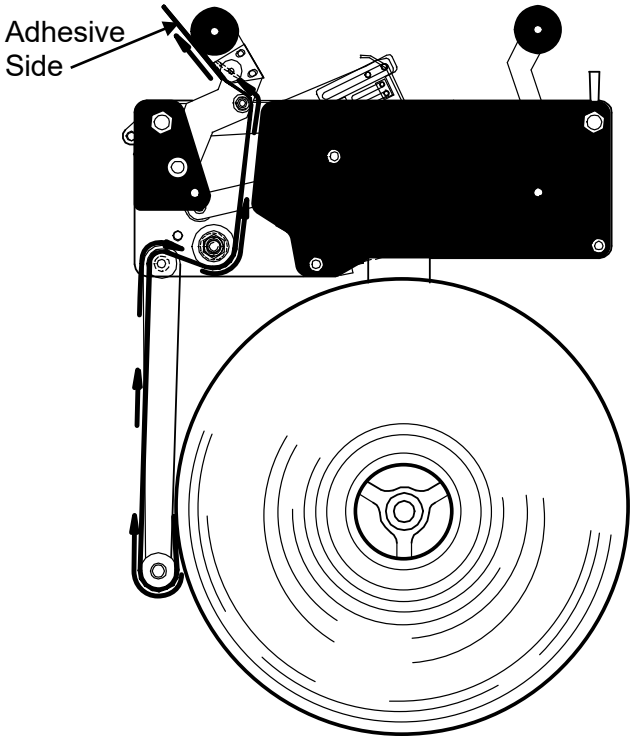

Center Tape

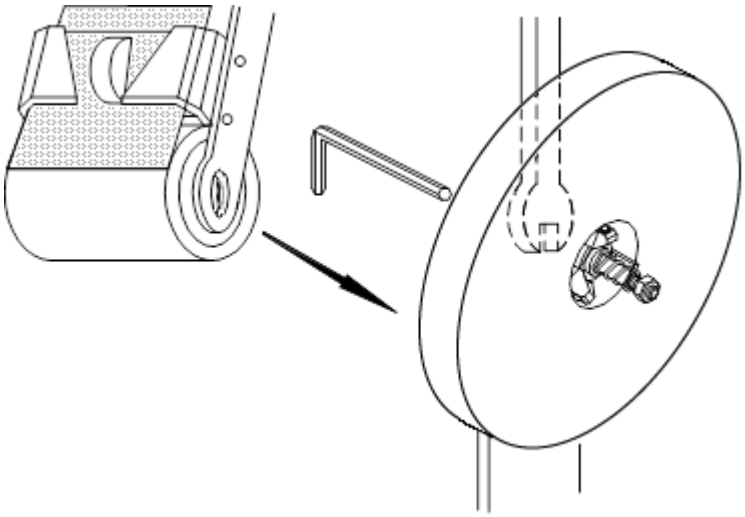

Make sure the tape is centered on all the rollers.

There are several rollers in the tape cartridge where the tape alignment should be checked to verify the tape stays on center as it is being dispensed.

Return the tape cartridge to the operation position.

Main Spring

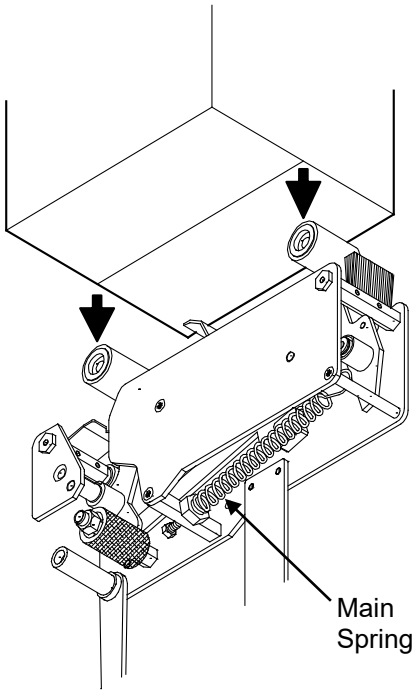

For sealing light weight boxes, decrease the main spring tension. For heavier boxes, increase the main spring tension.

When setting tension for the rollers, consider the amount of pressure on the box flaps required to make the seal. Partially-filled or light cartons may not require as much spring tension as fully-filled or cartons with heavier contents.

VIDEO: ERX-15 Case Erector Tape Sensor Adjustments
To see a video to guide you through tape sensor adjustments, click this link: https://www.youtube.com/watch?v=gqVVuNN3z-c or scan the QR code at right using the camera app on your mobile device.

Tape sensors are located down below the tape head mounting area and are visible through the space between the tape head and the belt nearest the main electrical enclosure.

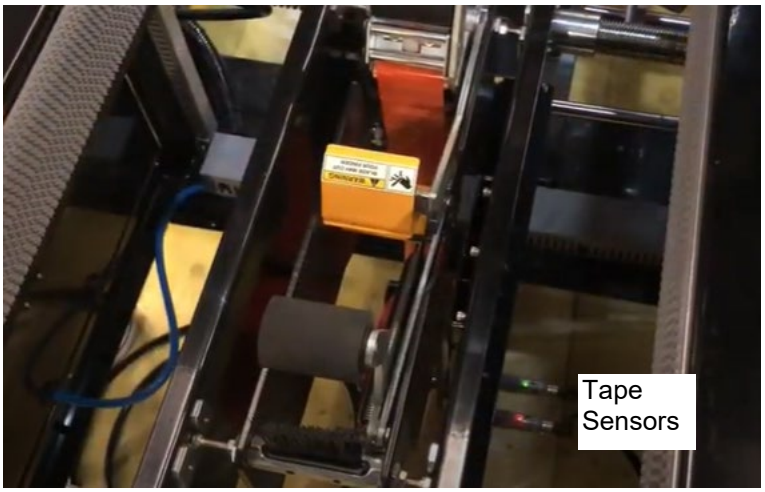

The tape break sensor is the sensor nearest the central erecting area; the tape low sensor is the sensor toward the exit.



In normal operation, the tape sensor glows green. The tape sensor will glow red if a fault indication occurs (if the tape breaks or is close to running out).

The position of the tape low sensor can be adjusted to determine how low the tape supply can be before the low tape alarm is triggered.

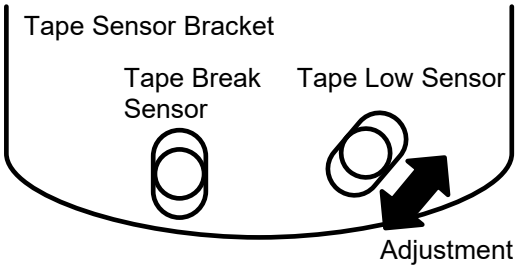

To trigger the tape low condition when less tape remains on the roll, reposition the tape low sensor closer to the center of the tape core; to trigger the tape low condition while more tape is still on the roll, reposition the tape low sensor farther away from the center of the tape core.

VIDEO: ERX-15 Case Erector Loading the Magazine Hopper

To see a video to guide you through loading the magazine hopper of the case erector, click this link: https://www.youtube.com/watch?v=gP4c79y24i0 or scan the QR code at right using the camera app on your mobile device.

1. Open the case magazine pushing paddles. These are the paddles machined with diagonal slots that keep constant pressure on the case blank stack in the magazine hopper area and are driven by the intake belts.

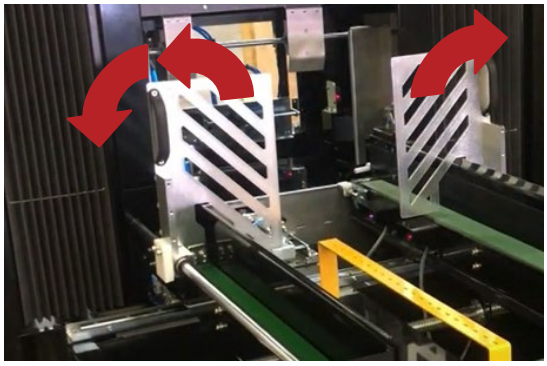

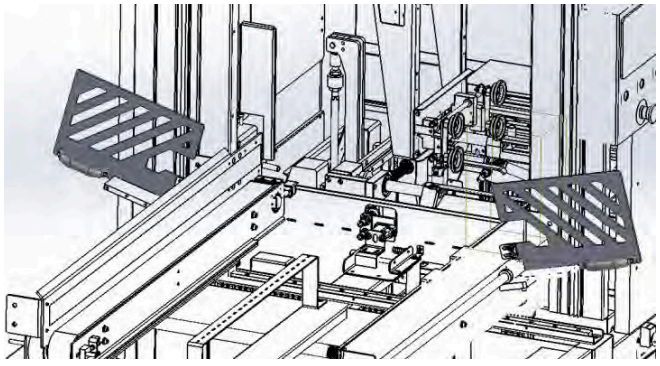

2. Load the magazine hopper with case blanks. Make sure the case blanks are square and press them into position.

3. Press the case blank stack against the machine, tightly at the top and bottom.



4. Once all case blanks are in position, place the slotted paddles behind the case blank stack. Close the case magazine pusher paddles to hold the case blank stack. Make sure the bottoms of the paddles touch the bottom belt where the bottom belt will engage the paddles and provide the necessary motion to move case blanks into the machine.





It is not necessary for the magazine hopper to run empty before refilling or adding additional case blanks. Case blanks can be added on the fly while the machine is operational.

VIDEO: ERX-15 Case Erector Single Case Test Run

To see a video to guide you through jogging a single case through the case erector to use the full jog run function to test the settings made to this point, click this link: https://www.youtube.com/watch?v=NdAsw6ZZNIU or scan the QR code at right using the camera app on your mobile device.

After the settings have been made and the magazine hopper has been loaded with case blanks, check the settings by jogging a single case through the case erector to check the settings to make sure they are right.

Make sure no one and no tools, case blanks or other items are inside the case erecting area and that the guard doors are securely closed, then reset the E-Stop. Reset the case erector to zero position by touching red Stop button then the blue Reset button

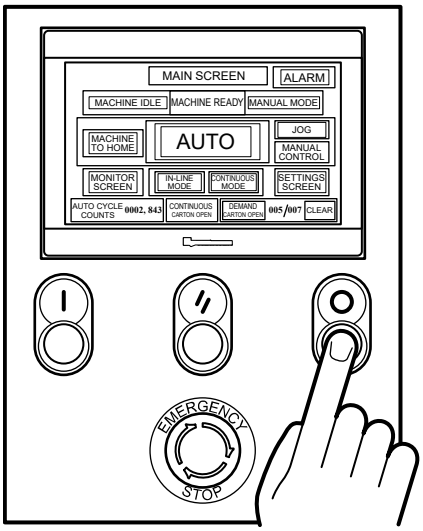

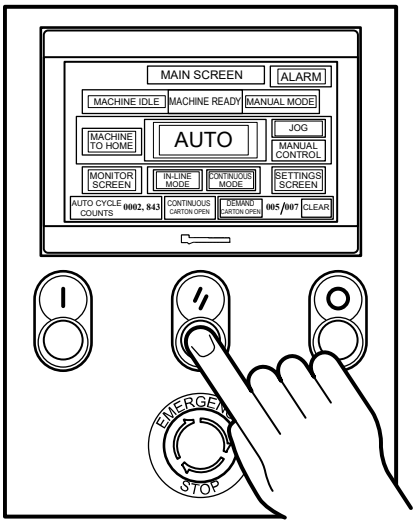

Touch Machine To Home on the HMI touchscreen to return the machine to home position. Put the machine into Jog mode by touching Jog on the HMI touchscreen.

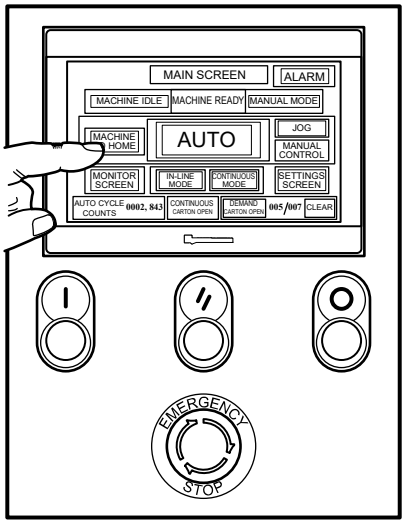

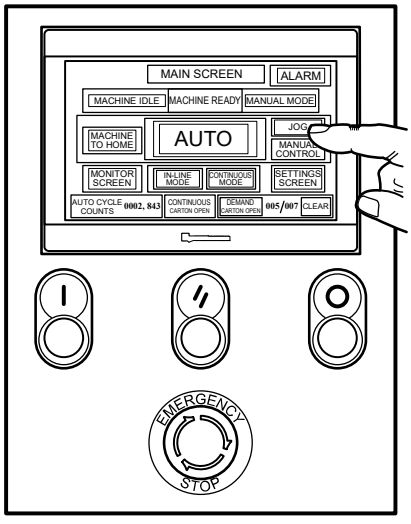

In Jog mode, each press of the green button will advance the case one step ahead through each of the steps involved in the process of erecting a case, from case blank to erected and bottom-taped case.

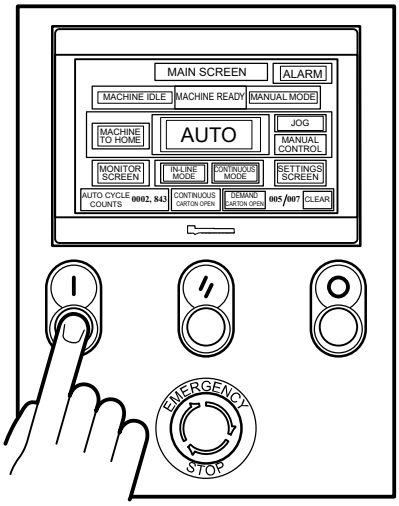

1. At the first jog step, one case blank from the magazine hopper stack is pushed into the case erector area and pushed down onto the base frame plate. Make sure the case blank is square with the machine. The bottom flaps of the case blank should press down to the plate and the score line and slot align with the separator pin in the base plate slot. If not, adjust the left/right adjustment crank as needed.

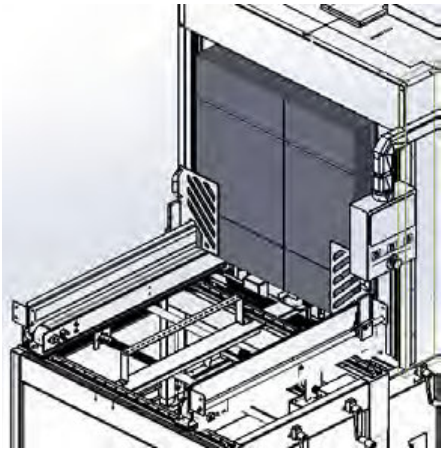

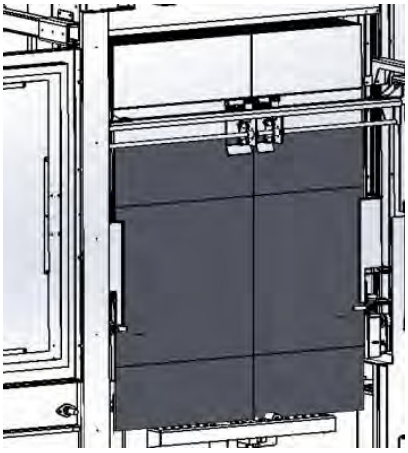

2. With the next jog, the case opener swings over to the case blank to adhere to it with suction cups. Check to make sure all suction cups that contact the case blank activate and adhere to the case blank. Make sure required suction cups are turned on and if necessary, adjust the position of any suction cups not positioned correctly.

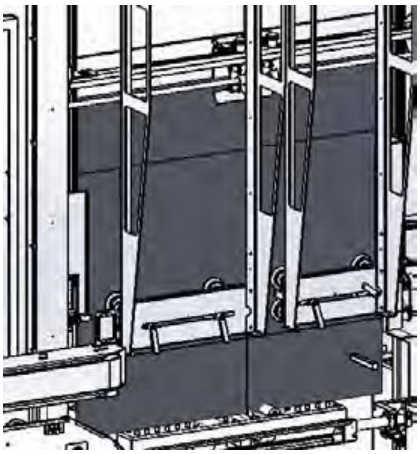

3. With the next jog, the case opening frames swing into the central erector space, opening the box. Check to see that the box corners are square at 90°. If necessary, adjust the left/right hand crank for centering the box.

   Note that as each case is swung out and opened, another case blank is advanced into the staging area from the magazine hopper and pushed down onto the base frame plate.

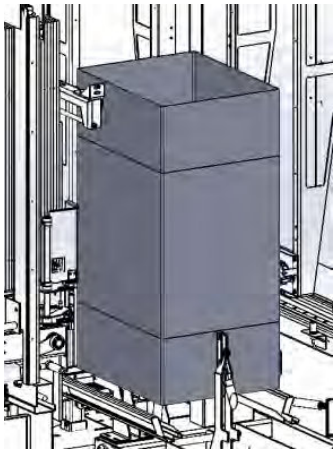

4. With the next jog, first the minor and then the major bottom flaps are closed. The minor flap closer will rise to close the two minor flaps between the major flaps and then the major flap closers will rotate to close the major flaps.

   Check to see that the flaps are closing correctly, and the case is not being tilted. If the case is tilted after the flaps are folded in, adjust the hand crank for setting the bottom seat higher or lower.

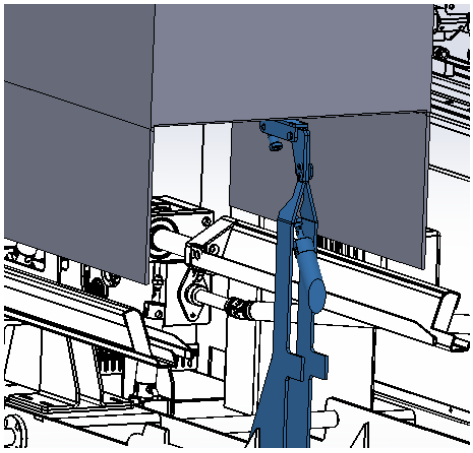

At the same time the major flaps are being closed, the suction cups will release and withdraw from the carton.

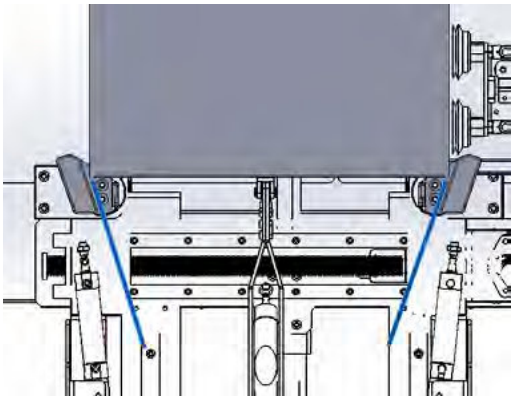

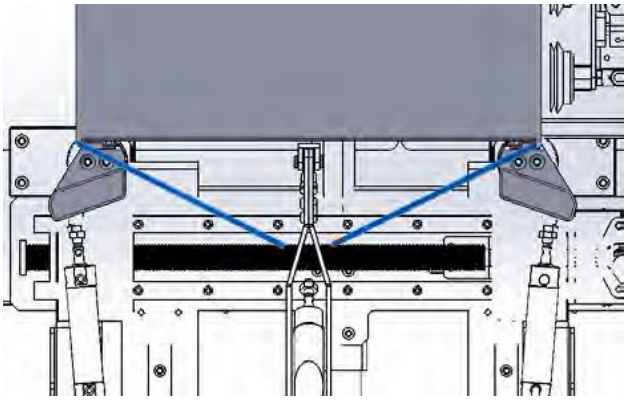

5. The box feeder will then push the erected box into the taper area for a bottom tape seal.

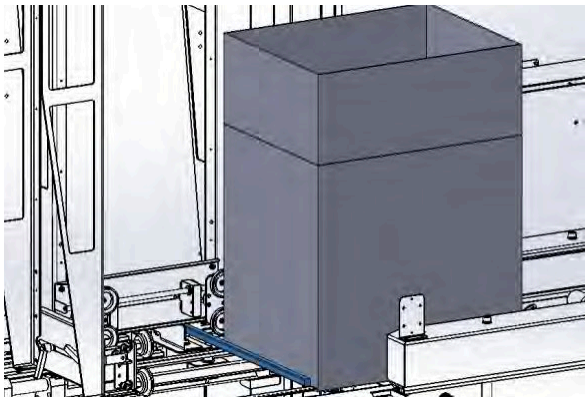

Check to make sure the side belts are grasping the formed case and moving it through the taping area and the tape head is adequately taping the bottom of the case. If necessary, adjust the hand crank as necessary for the width of the exit taping area side belts.

VIDEO: ERX-15 Case Erector HMI Manual Control Settings
To see a video to guide you through using the HMI manual control settings, click this link: https://www.youtube.com/watch?v=8yukcCA6bLI or scan the QR code at right using the camera app on your mobile device.

The HMI Manual Control Settings allow each function of the case erector to be controlled individually.

To enter the Manual Control settings for the case erector, first reset the machine and return all machine functions to their home positions by touching Machine To Home, and then touch Manual Control on the HMI touchscreen.

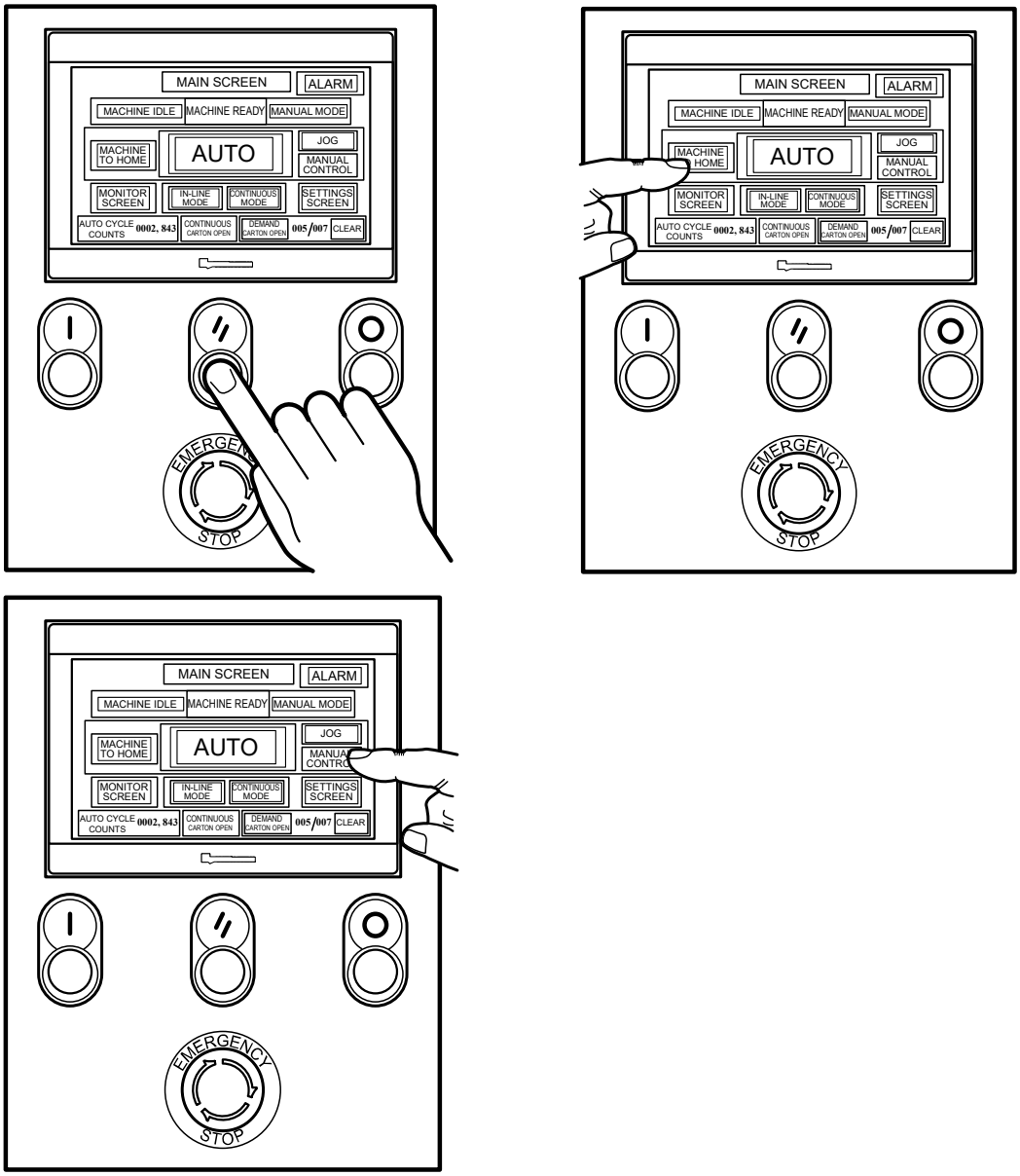

Manual Control Screen

From the Manual Control Screen, allows for the operation each machine function manually and independently. Buttons at the top of the Manual Control Screen provide quick access to the Home Main Screen, the Monitor Screen and

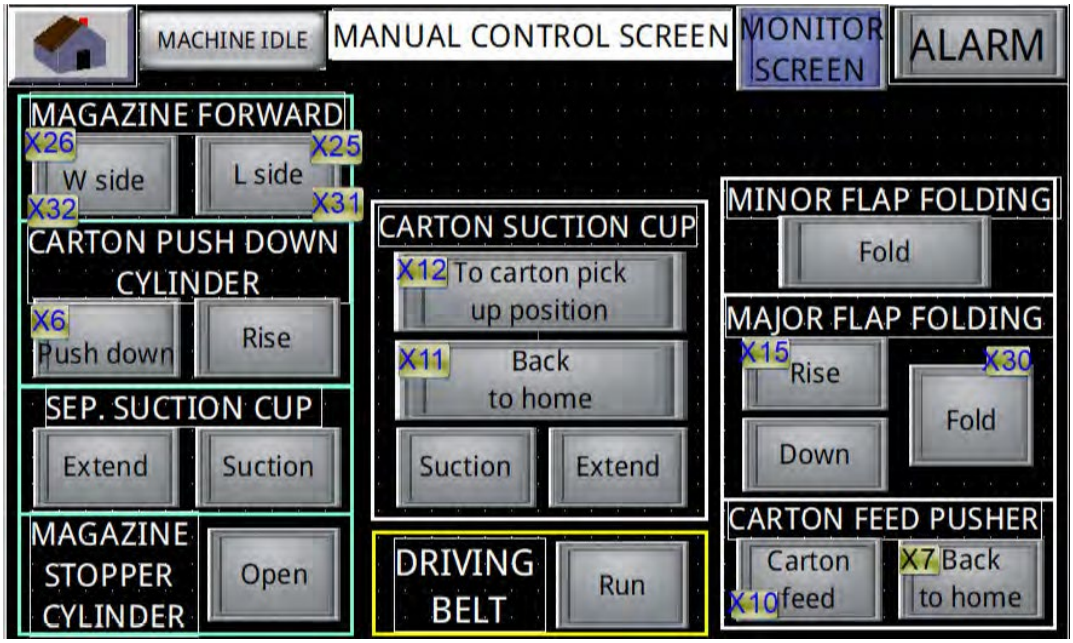

NOTE: **Several of the buttons in the Manual Control Screen have small indicators with a letter and number at a corner or corners of the button. These indicate a sensor identifier and allow a service technician to quickly and easily switch to the Monitor Screen for the selected component and check its status.**

Alarm



The Manual Control Screen provides access to the Alarms screen, where you can view any current Alarm Message or the Alarm message history.

Monitor Screen



Monitor Screen provides a way to monitor the status of all components the case erector.

Magazine Forward



The Magazine Forward buttons provide manual control to advance the magazine belts forward. The two belts, one each side, can be operated individually.

- **W-Side** is for the case blank width-side conveyor
- **L-Side** is for the case blank length-side conveyor.

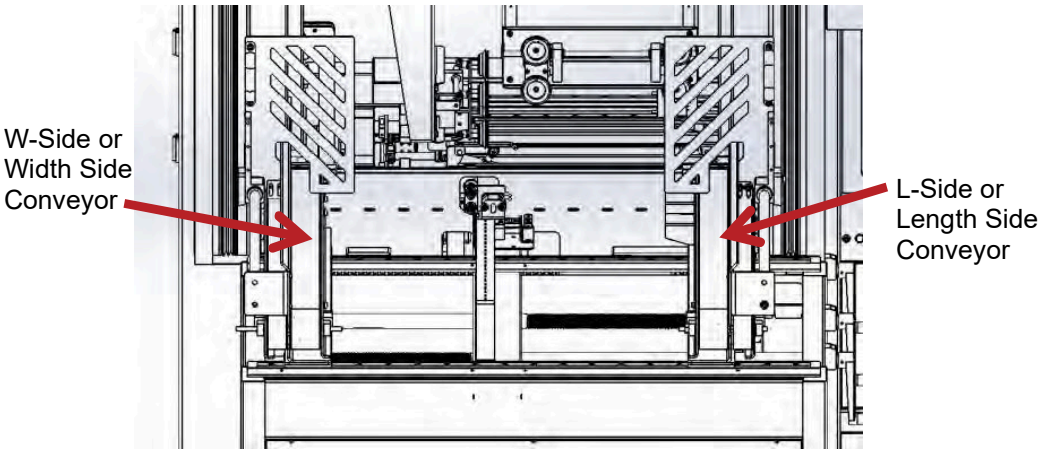

Carton Push Down Cylinder

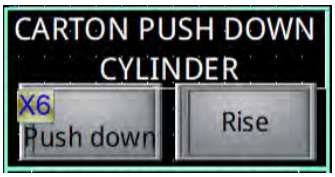

The carton push down cylinder is the cylinder that pushes the case blank down to the base plate as it enters the staging area from the magazine hopper. The cylinder can be activated to push the pushdown brackets down, or it can be raised up to its home position.

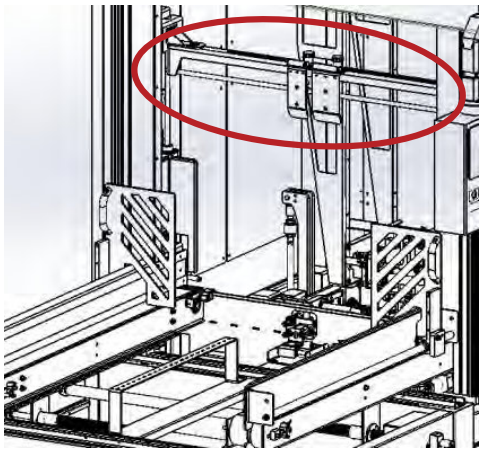

Separator Suction Cup

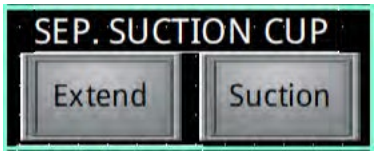

The separator suction cups can be extended, or suction activated by touching the buttons in this section of the Manual Control Screen.

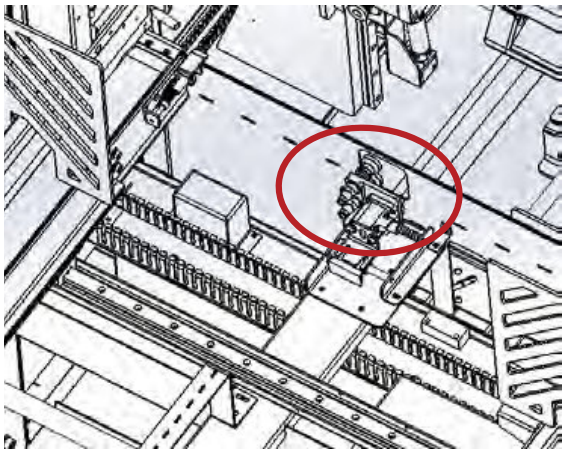

Carton Suction Cup



The carton-opener structure can be extended to pick up position or returned back to home and carton suction cups can be extended or suction activated by touching the buttons in this section of the Manual Control Screen.

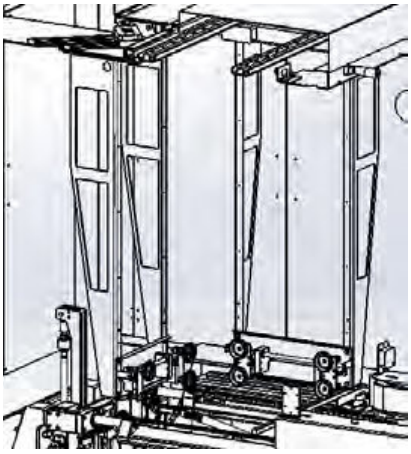

Driving Belt



The driving belt refers to the exit conveyor belts that move the erected case through the base sealing area and out through the exit of the case erector. The driving belt motor can be turned on to run or shut off using the button in this section.

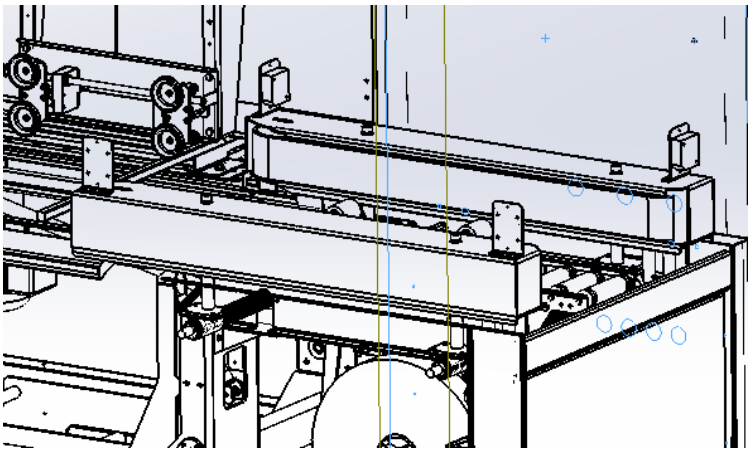

Minor Flap Folding



The minor flap folding mechanism can be activated to execute the minor flap folding motion.

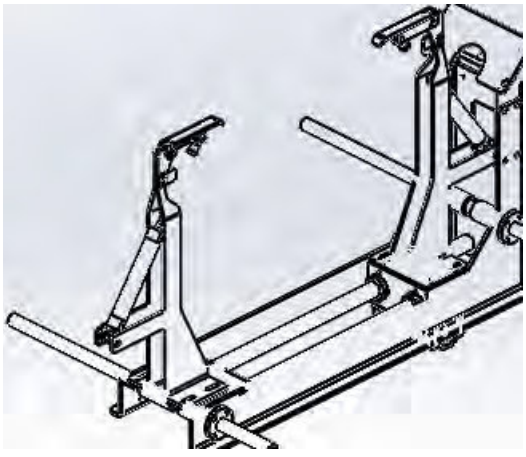

Major Flap Folding



The major flap folding mechanism can be activated to rise, perform the major flap folding motion, and return down.

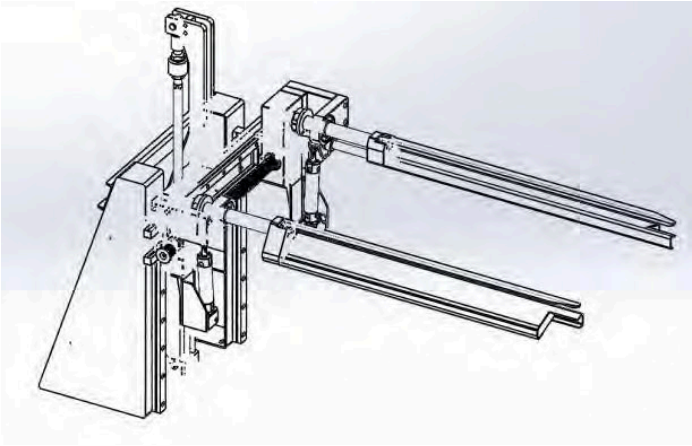

Carton Feed Pusher

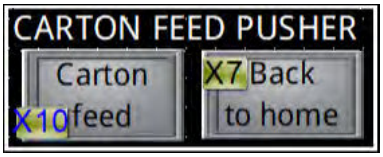

The carton feed pusher can be activated to perform the carton feed motion and to return it back to home position.

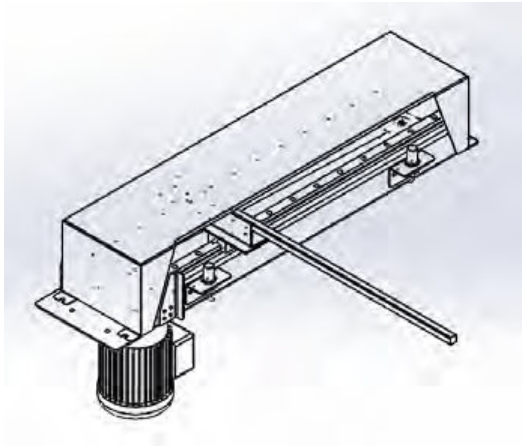

VIDEO: ERX-15 Case Erector Continuous and On Demand Mode
To see a video to guide you through using the full jog run function, click this link: https://www.youtube.com/watch?v=fVJ_jlFGNvE or scan the QR code at right using the camera app on your mobile device.

There are two modes of operation of the ERX-15 case taper.

- In **Continuous Mode**, the case erector will continue to run until the magazine hopper is empty.



- **On-Demand** mode will run a pre-specified number of boxes. The desired number of boxes is specified by entering he number in the field to the right of the On-Demand button and case batch count.



VIDEO: ERX-15 Case Erector Every Delay Timer Settings
To see a video to guide you through using the every delay time setting, click this link: https://www.youtube.com/watch?v=XEpSASu2byw or scan the QR code at right using the camera app on your mobile device.

Every Delay (Steps Delay) Setting, HMI Notepad Recipes, Rear (Separator) Suction Cup Delay, and Opener Retreat Speed Settings are made in the Box Size Settings Screen, which is accessed from the Settings Screen.

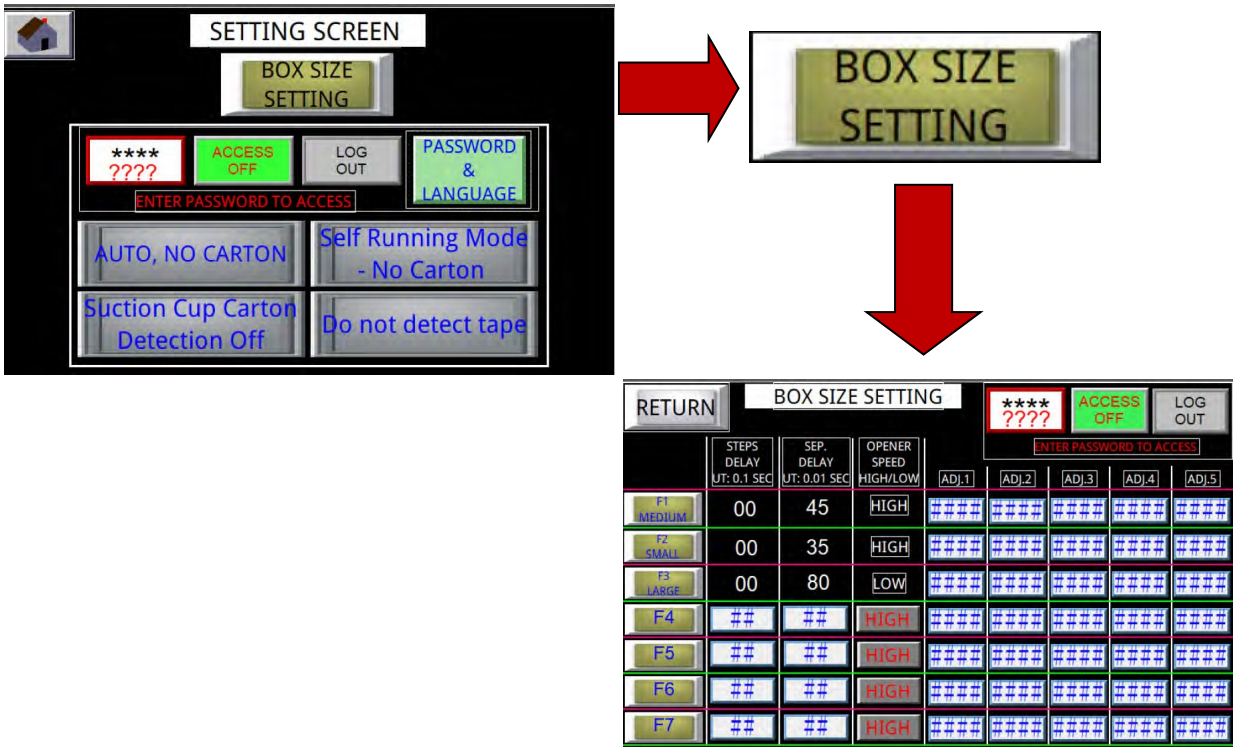

The Password PIN is set by default to 1234 (unless changed).



Every Delay Timer Settings allows you to insert in a delay for every action the case erector makes to process a case from collapsed blank to erected, bottom-sealed carton. This can be helpful in troubleshooting any problems that may occur in forming specific cases.

The delay time settings for Every Delay are by default set to zero, meaning no delay is added and each action of the ERX-15 Case Erector is performed in the minimum time required. Adding a delay will cause the machine to pause for the time duration entered.

- Numbers entered represent tenths of a second.
- Delay time can be entered from 0 (no delay) up to 99, representing 9.9 seconds of delay.
- Three different preselected delay settings are set up by default based on the size of the carton.
  F1 – Medium Box
  F2 – Small Box
  F3 – Big Box
- Up to seven total (F1 – F7) box sizes total can be set up with different preset delay timing and opener speeds.

VIDEO: ERX-15 Case Erector HMI Notepad Recipe
To see a video to guide you through using the HMI notepad recipe feature, click this link: https://www.youtube.com/watch?v=cLisAIzr1dQ or scan the QR code at right using the camera app on your mobile device.

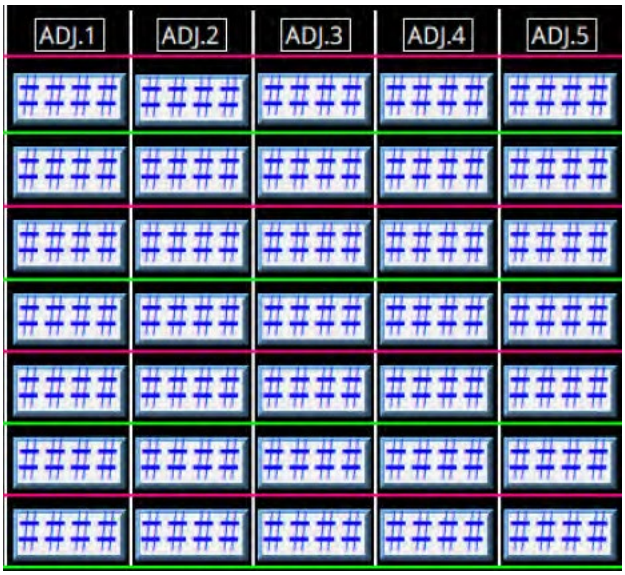

The HMI Notepad Recipe portion of the Box Size Settings screen provides a place to store crank handle settings for various size boxes as a notepad reference in table format. Once you enter the password, you can store numerical values corresponding to each crank handle setting in the table cells.

ADJ. 1 through ADJ 5 — Enter numbers that correspond to adjustment numbers for corresponding hand crank adjustment numbers for each box size run.

VIDEO: ERX-15 Exit Box Sensor Modes
To see a video explaining the exit box sensor modes, click this link: https://www.youtube.com/watch?v=sU4-K3c2Pws or scan the QR code at right using the camera app on your mobile device.

There are two modes for the Exit Box Sensors.

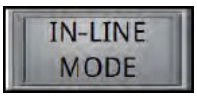

- **In Line Mode** will set the exit sensor on the sealer/exit belt to stop feeding boxes if the sensor is blocked.



- **Continuous Mode** will ignore the state of the exit sensor and will continue feeding boxes regardless of whether or not the exit senor is blocked.

VIDEO: ERX-15 Case Erector Rear Suction Cup Adjustment
To see a video to guide you through using adjusting the case erector rear suction cups, click this link: https://www.youtube.com/watch?v=Yz3XLkcxBIk&list=PLw2fFM1Tj1XVlqawAzk0PZmhsFO16VsZo&index=11 or scan the QR code at right using the camera app on your mobile device.

The Separator Suction Cup Delay settings allow you to change the length of time the separator suction cups will activate.

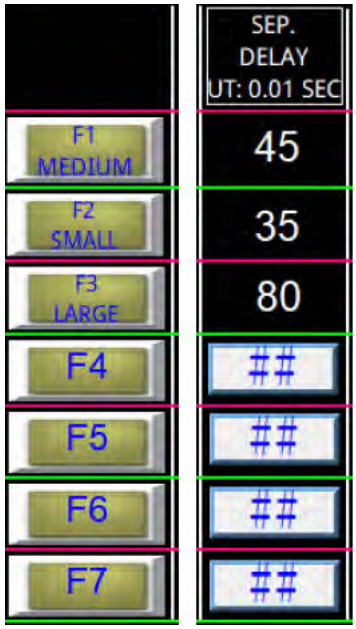

- Three different preselected delay settings are set up by default based on size of the carton.
  F1 – Medium Box
  F2 – Small Box
  F3 – Big Box
- Up to seven total (F1 – F7) box sizes total can be set up with different preset delay timing and opener speeds.

The number entered in the Separator Suction Cup setting is directly related to the length of time the separator suction cups will be activated. Generally, the larger the box, the longer the separator suction cups should be active. Smaller boxes will require contact with the separator suction cups for a shorter time. Larger boxes require contact with the separator suction cups for a longer duration.

- The three Separator Suction Cup Delay settings that have been set up by default, by size of carton, are as follows.
  F1 – Medium Box = 45
  F2 – Small Box = 35
  F3 – Big Box = 80
- No default settings have been pre-entered for F4 – F7.

VIDEO: ERX-15 Case Erector Retreat Speed Settings

To see a video explaining the retreat speed settings, click this link: https://www.youtube.com/watch?v=66qvLu5ykr8 or scan the QR code at right using the camera app on your mobile device.

There are two available settings for Opener Retreat Speed, Low and High. This setting will determine the speed with which the case is pulled out from a blank in the staging area to where it is formed to 90°. Again, box sizes are categorized by three sizes.

F1 – Medium Box
F2 – Small Box
F3 – Big Box

- Up to seven total (F1 – F7) box sizes total can be set up with different preset opener speeds.



Generally, smaller boxes can be moved at faster (High) speed, and the larger the box, the slower (Low) speed required to maintain the case integrity as it is being formed.

- Default Opener Retreat Speed settings, by size of carton, are as follows.
  F1 – Medium Box = High
  F2 –Small Box = High
  F3 – Big Box = Low
- No default settings have been pre-entered for F4 – F7.

Password Setting Screen

The Password Setting Screen allows you to do the following.

- Change the machine password
- Change the language displayed in all screens of the HMI touchscreen
- Clear the auto cycle counts.

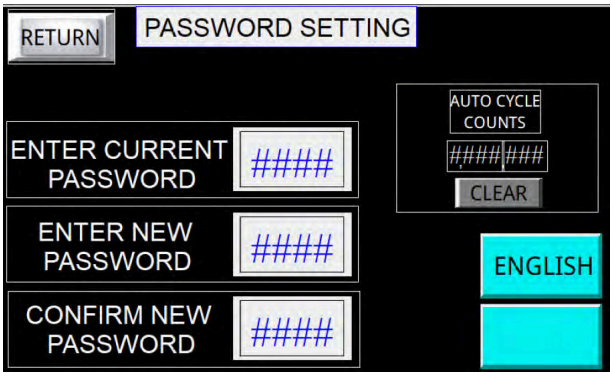



CAUTION: Two serious considerations in the Settings screen where special care must be taken are: the language selection and the Password Setting. If the wrong language is selected, it may not be clear how to get the settings back to your language. If the password is changed from the default value (1234) it is important that you remember or record what it has been changed to, as we have no way to retrieve or reset a changed password.

Monitoring Screens

There are three screens for monitoring functions of the ERX-15 Case Erector. They are divided by functional areas of the Case Erector.

- Magazine Hopper Area
- Taping Area
- Carton Opening Area

Monitor Magazine

The Monitor Magazine screen is a reference that allows you to inspect each sensor or valve in the magazine hoper area of the case erector to see that they are functioning normally.

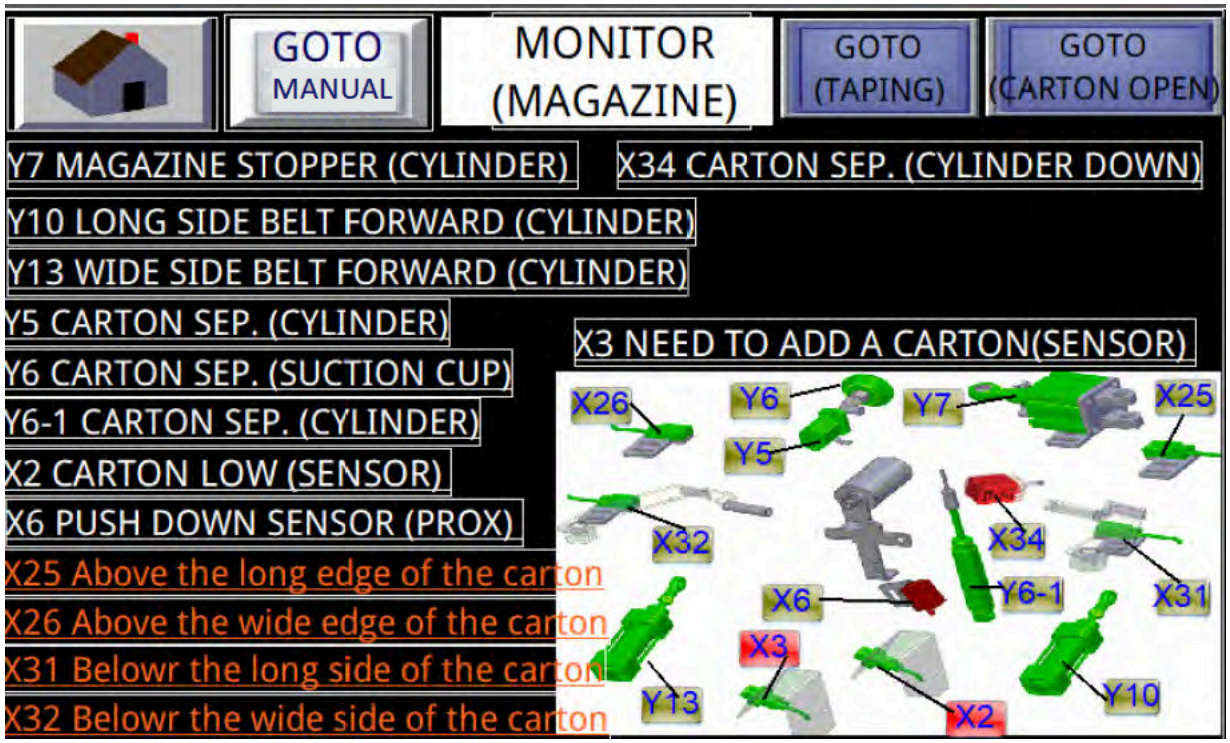

Monitor Carton Open

The Monitor Carton Open screen allows you to inspect sensors and valves in the carton opening area of the case erector to see if they are functioning normally.

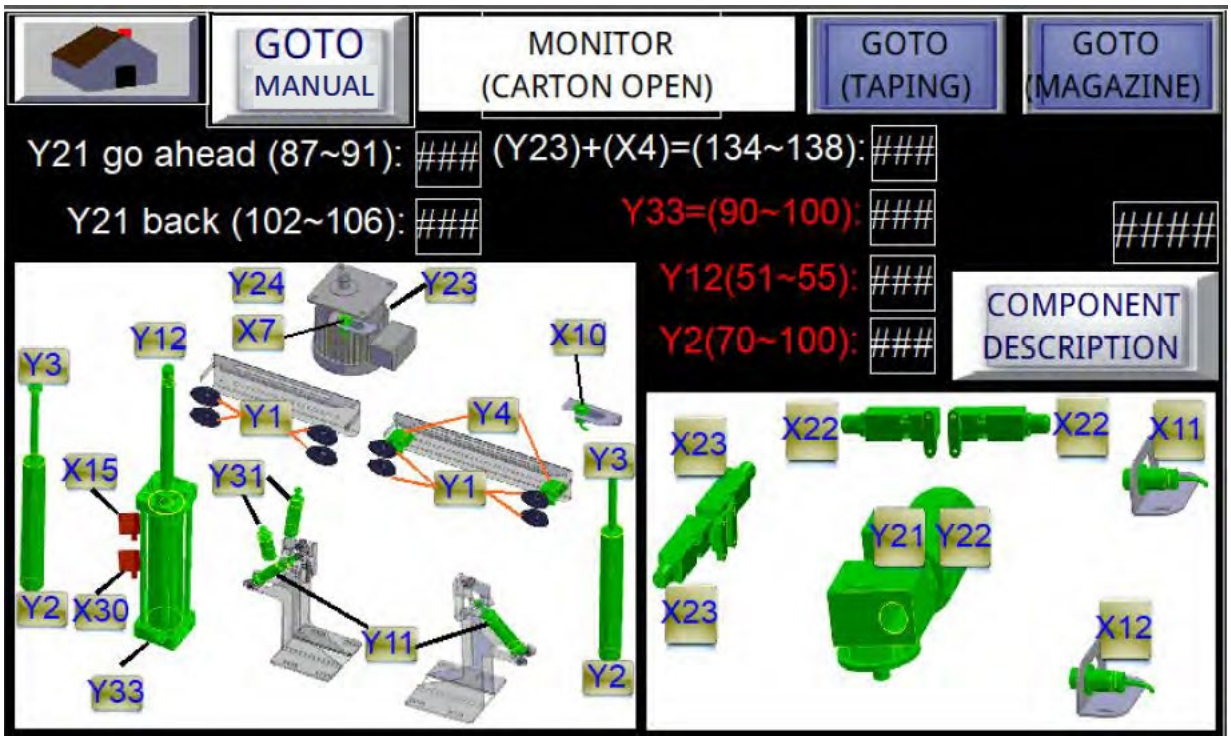

This screen also allows setting the values of important parameters.

- Y21 — go ahead: the time for the opener to move forward at HIGH Speed (Value from inverter).
- Y21 back — the time for the opener moving forward at HIGH Speed (Value from inverter).
- Y23 + X4 — the time for the box feeder to push the box until it passes the entrance sensor of the taping belts (Value from inverter).
- Y33 — the time for the major flap closer unit to rise up (this value can be adjusted from pneumatic control).
- Y12 — the time for the major flap closer unit to rise up (this value can be adjusted from pneumatic control).
- Y2 — the time for the top pusher to push the carton blank downward until it activates sensor of X6 (this value can be adjusted from pneumatic control.
- The unlabeled number at the far right of the screen is the total time to finish one box cycle.

Component Description To see descriptions of the valves and sensors pictured, touch the **Component Description** button.

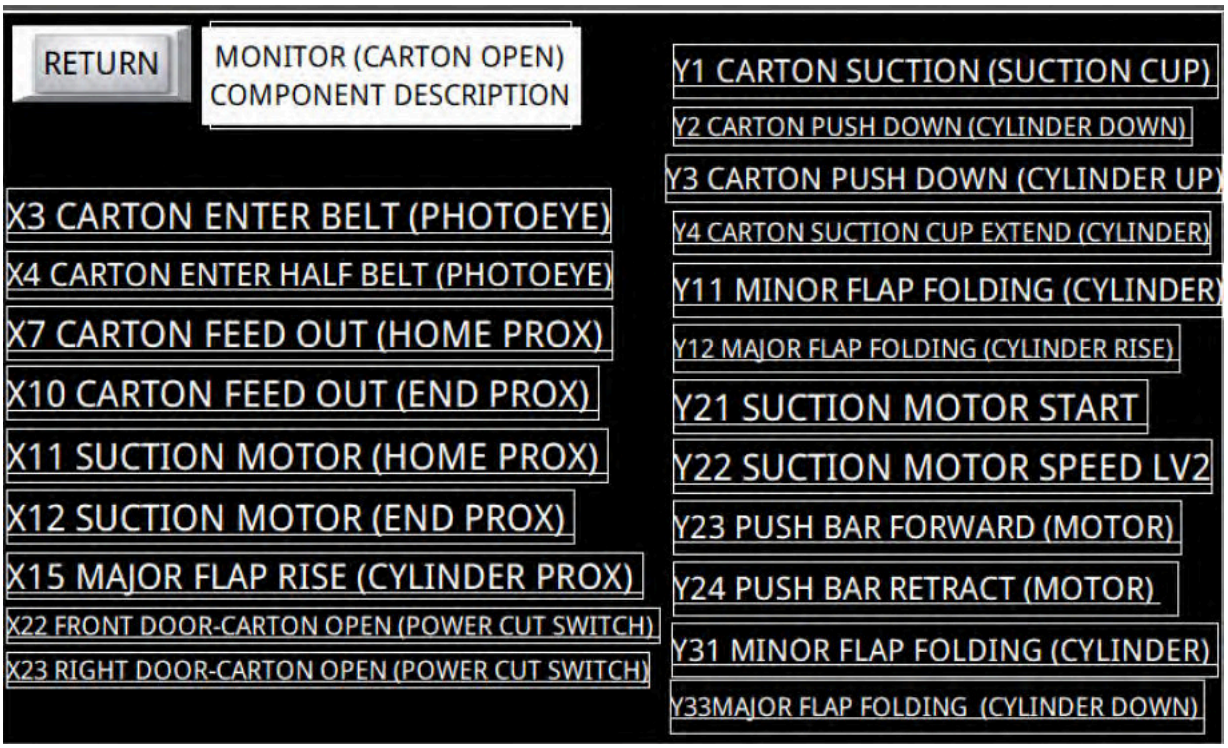

Monitor Taping

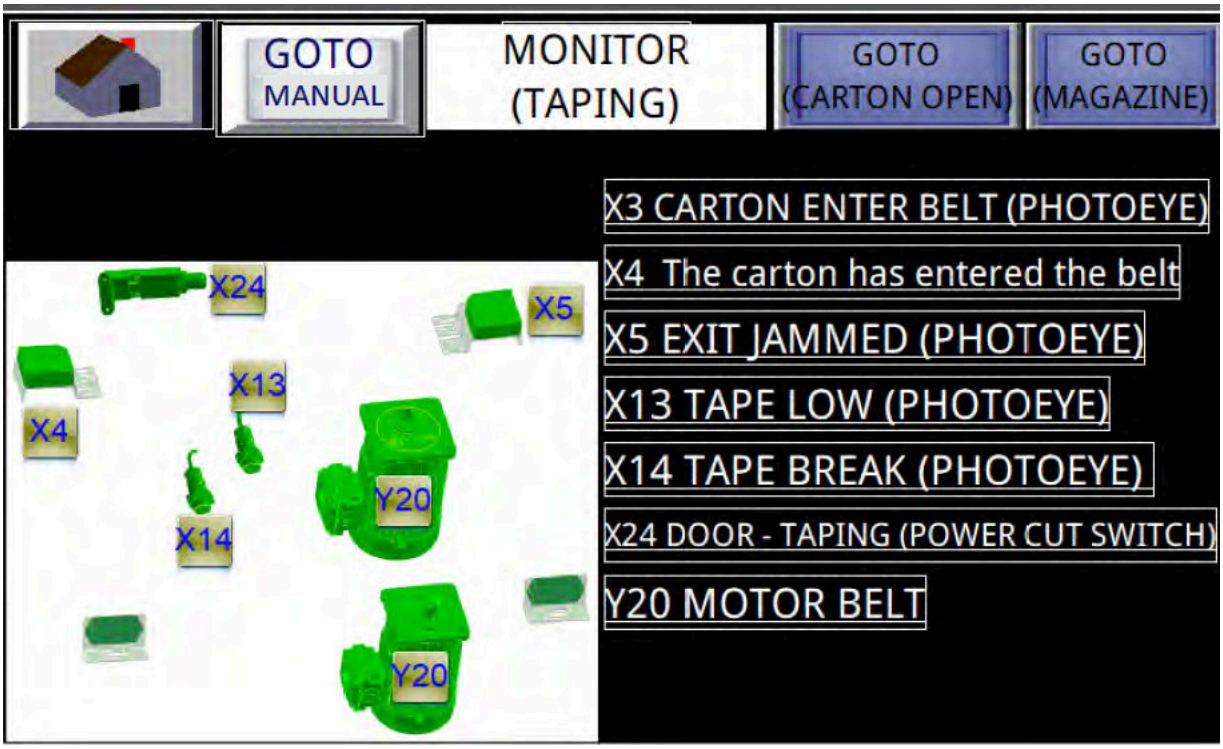

Alarms

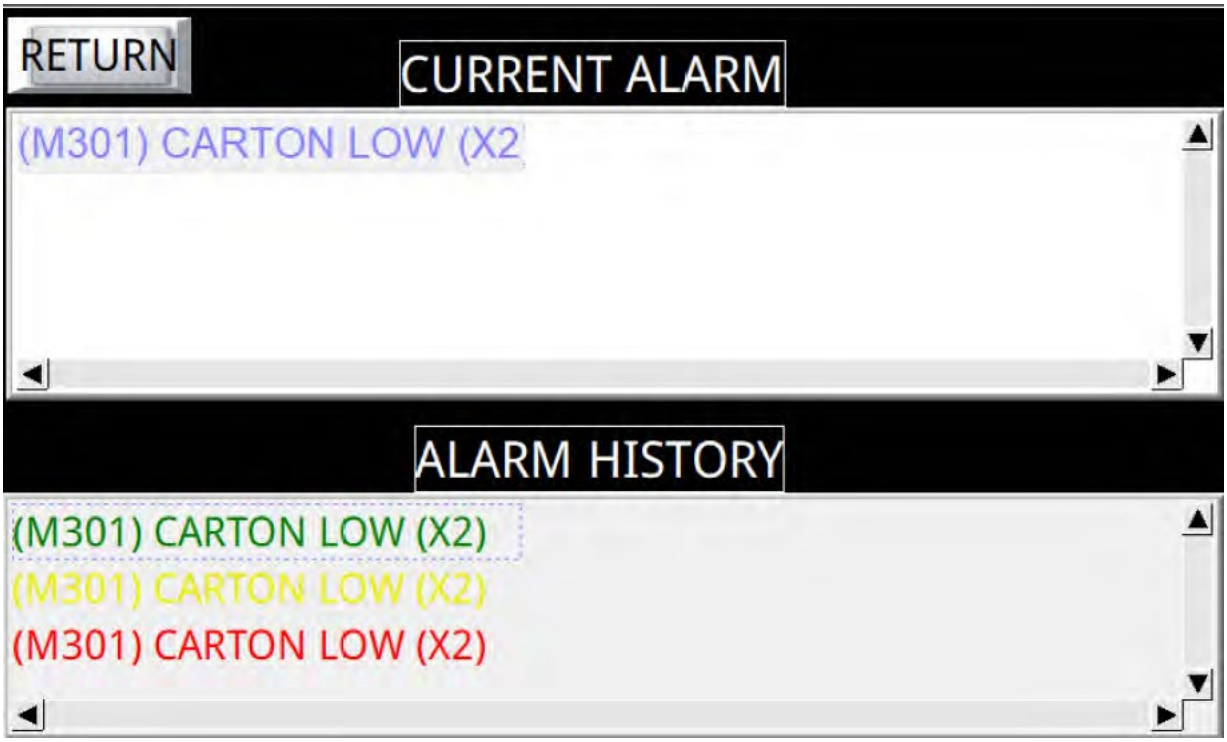

The Alarms screen displays system alarms, both current and past. The screen is divided into two windows: the top window shows currently active alarms; and the lower window shows a scrolling list of alarms that have been recorded by the system.

Return Touch the **Return** Button to return to the system Main screen.

Control

Lamp Power When the main power switch is set to On, the lamp power should be on too. While the lamp is on, it indicates the machine is ready to run.

Start Button Press the Start button to start the automatic or manual program running.

Stop Button Press the Stop button to allow the machine to stop in an orderly fashion. If it is in auto mode, it will finish the current cycle and then stop.

Emergency Stop

Press the E-Stop (Emergency Stop) to stop all machine motion in the event of an emergency. To reset after the emergency situation has been cleared, turn the E-Stop button a quarter-turn to release the switch.

Reset Button

After an Emergency Stop, and the emergency situation has been cleared, reset the E-Stop button as described above and press the Reset button to reset the machine before running it again.

Main Power

Controls electrical power to the case erector. In the Off position, electrical power is shut off; in the On position, the machine controls are connected to electrical power.

Air Pressure Unit

Air Capacity: 250 liters/min
(~20 liters/cycle)
Pressure setting: 6 Kg/cm^2 (85 PSI)

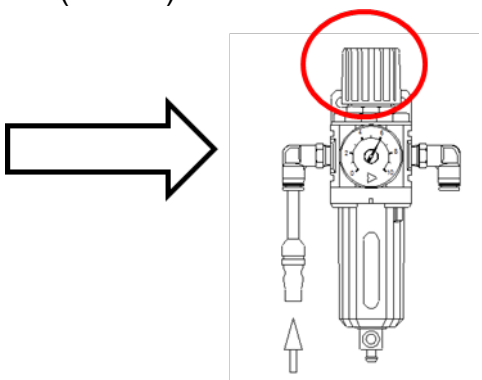

Vacuum Unit

Vacuum Setting: 24 cmHg
(While Working)

Electric

Electric Capacity

Power Consumption: 0.9kW
Current: 110V : 10 A
Power Cable: 1.5mm^2

Adjustments

Shut off power and disconnect electrical connections before making any adjustments.

WARNING: Unless otherwise specifically stated, before performing any adjustments, maintenance, or repairs, power off the system, disable the power source, and do the same for all connected equipment consistent with logout/tagout best practices. See https://www.osha.gov/control-hazardous-energy or scan the QR code at right using the camera app on your mobile device.

Machine Base Height and Leveling Adjustment

Each leg of the case erector is adjustable to allow height adjustment.

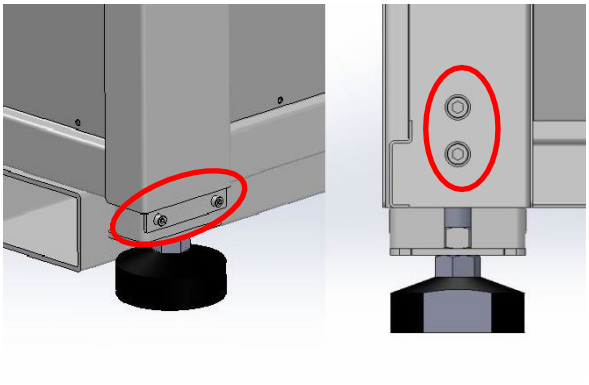

Height adjustment is from a minimum of 26.7 in. (68 cm) to a maximum of 34.7 in. (88 cm), for 8 in. (20 cm) adjustment total, at the output conveyor, in 2 in. (50 cm) increments.

Note: **When adjusting height to raise or lower the case erector, place a level across flat continuous surfaces at the top of the base and adjust the base to be level in both directions.**

Belt Tension Adjustment

Belts at both the intake and exit taping area use a similar mechanism for settting the belt tension.

1. To adjust the belt tension, begin by loosening the screw through the center of the roller, shown in position “A” in the following illustration, that secures the roller in place.

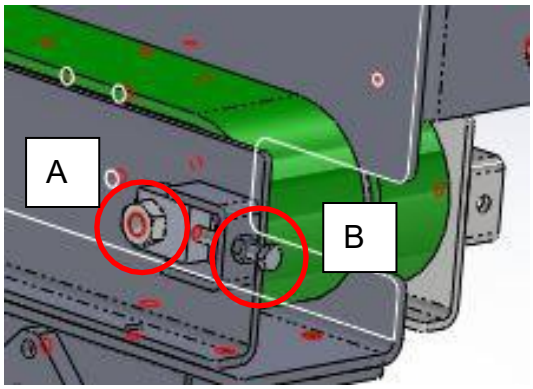

Intake Belt

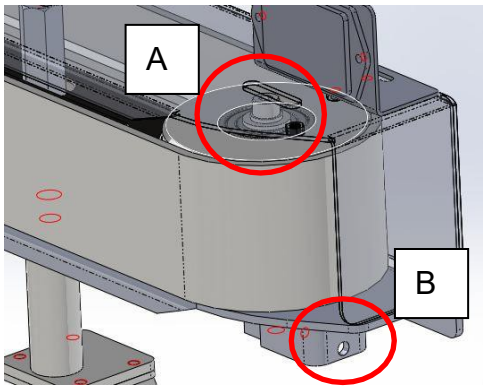

Taping Area Exit Belt

2. Adjust tension by tightening or loosening the tensioning screw in position “B.”
3. When the belt has been set to the required tension, re-tighten the screw through the center of the roller to secure it at the re

Hand Crank and Case Size Dimension Adjustments

Adjustments to the case erector to accommodate case dimensional size changes are made by turning hand cranks on the outside of the case erector. These cranks are labeled with numbers 1 through 5. Adjustments 6 and 7 are inside the case erector enclosure and are not labeled.

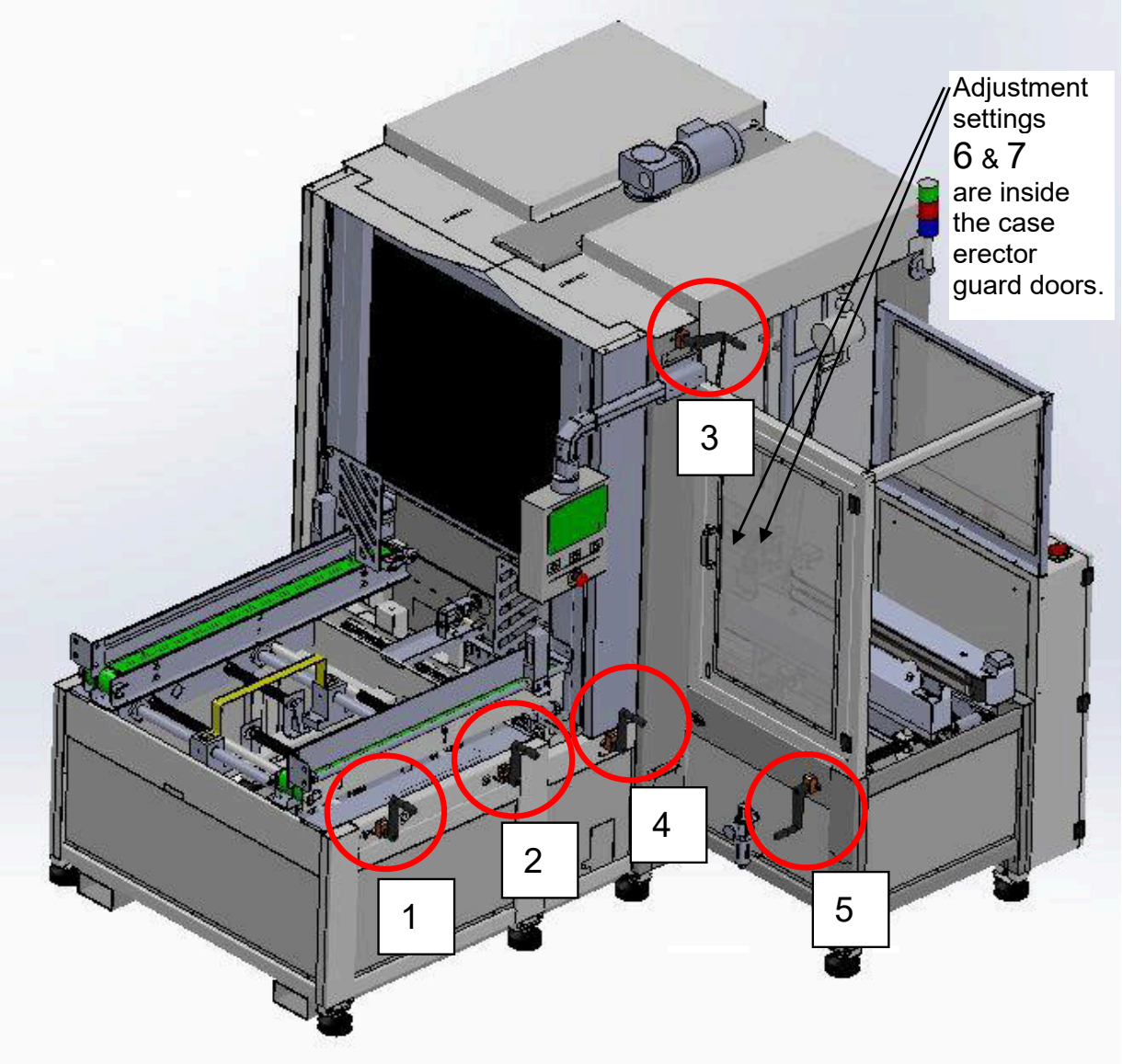

Here is a brief outline describing how the seven adjustments (five crank handle adjustments and two internal adjustments) relate to the dimensions of the case blank and resulting erected case:

Adjustment 1: Case Width; the width of the case minor panel, W.

Adjustment 2: Case Length; the length of the case major panel, L.

Adjustment 3: Case Height plus the Case Width; the overall height of the case blank. W/2 + H + W/2, or simply H + W.

Adjustment 4: Half of the Case Width; the width of a case flap or W/2.

Adjustment 5: Case Width; the width of the case minor panel, W.

Adjustment 6: The sixth adjustment relates to the Case Length and Case Width. It will be to adjust the location of suction cups to contact the case blank, to distribute more or less evenly the area supported by each suction cup.

Adjustment 7: The final adjustment relates to the overall height and thickness of the case blank. This adjustment is required to make sure one, and only one, case blank is pushed into the case erector area for each cycle.

Important! **Before making early adjustments (1, 2, 3 & 4) it is important to look at the push-down brackets that will be positioned in Adjustment 7. Before making the earlier adjustments, make sure the brackets are placed inward far enough where intake belts will not crash against them while adjusting intake belt width and alignment using the crank handles.**

Case Dimensions Are Figured as Follows

Finished Case Dimensions

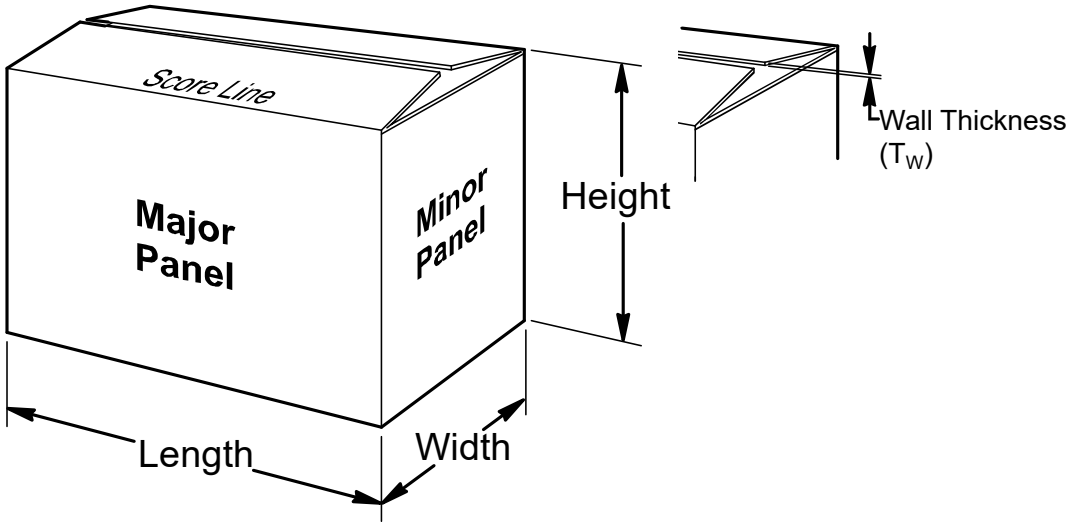

Case Blank Dimensions

For practical purposes, consider the case blank thickness (T_B) to be approximately equal to twice the case wall thickness (T_W).

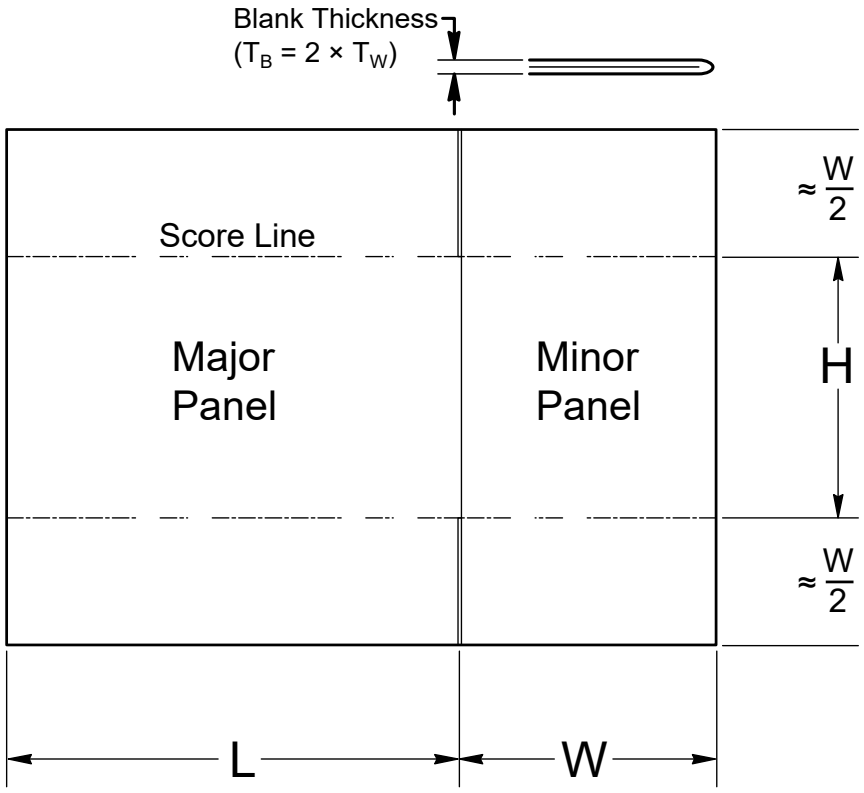

Position the suction cups so they will be centered vertically on the panels, and spaced at regular intervals horizontally at approximately one-third and two-thirds of each panel when they grip each case.

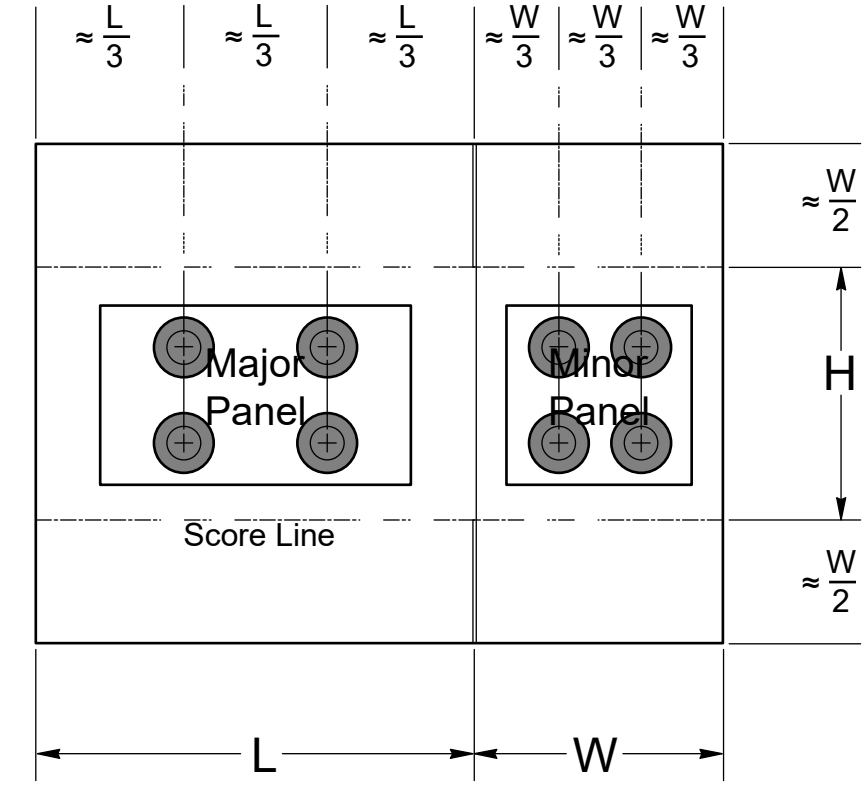

For cases with one or both panels too small for both pairs of suction cups, use only the inner pair of suction cups, aligned to be centered on the panel, and shut off vacuum to the outer pair.

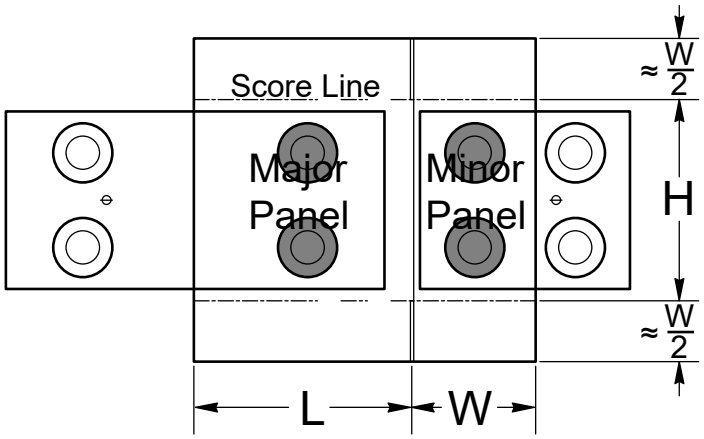

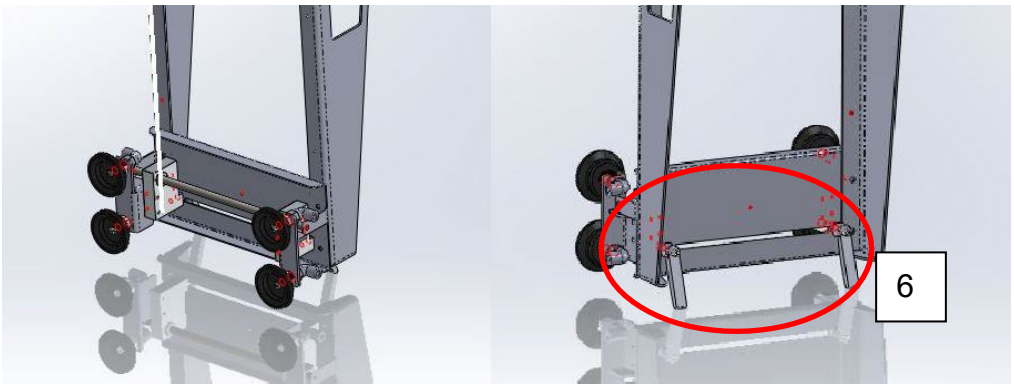

To reposition suction cups on either case-opening frame (long side or wide side), loosen the lever on the back frame corresponding to the cups to be moved. Move the suction cups to the required position and then re-tighten the lever to secure the suction cups in place.

Maintenance



WARNING: Unless otherwise specifically stated, before performing any adjustments, maintenance, or repairs, power off the system, disable the power source, and do the same for all connected equipment consistent with logout/tagout best practices. See https://www.osha.gov/control-hazardous-energy or scan the QR code at right using the camera app on your mobile device.

CAUTION!

- **Shut off power and disconnect electrical connections before cleaning or performing maintenance tasks.**
- **Allow only trained personnel to service the machine or perform maintenance.**
- **Make sure machine has stopped and all parts have stopped moving and are secure before attempting service or maintenance. Moving parts can entangle or crush.**
- **Always be aware of the cutting blade when handling or working near the tape cartridge. Be careful to avoid contact with the tape cutting blade.**
- **Use the correct tools for the work required.**

Preventative Maintenance

☐ Once a week, check the machine for accumulation of dust and cardboard or paper scraps that results naturally in carton erecting and handling. This dust can cause premature excessive wear of system components or overheating of drive motors if not removed and allowed to accumulate. Use a vacuum to remove larger accumulations when required. Use a dry cloth or rag to remove excessive accumulations that cannot be removed by vacuum. If necessary, the cleaning cloth or rag can be lightly-dampened with water or diluted mild detergent. Do not spray water or wet-wipe the machine.

☐ If buildup of tape adhesive occurs, carefully wipe the area clean with an oiled cloth or brush. A light film of oil will help prevent buildup of tape adhesive.

☐ Check the condition of taper cutting blades and replace them if worn or damaged to ensure a good cut of the tape on each case.

☐ Check the condition of the belts and suction cups. Check for any accumulation of paper dust or dirt that may be stuck onto surfaces, and check condition for excessive wear or torn material. Clean or repair and replace as necessary.

- ☐ Adjustment hand cranks: every 250 hours of operation, apply a small amount of silicone to the end of each spring where the loop is secured to an eyelet. Wipe off excess silicone as it will attract dust which can cause premature equipment wear and jamming. Take care that no silicone is left on the surface of the taper rollers, as it can contaminate the tape adhesive and make it less effective.
- ☐ Check the tension of the intake belts and exit belts and adjust tension as needed.
- ☐ Periodically check the area surrounding the case erector to make sure no carton stock or other items are placed against the sides of the machine, which could cause wear on exterior surfaces or produce excessive noise through vibration. Check to make sure no items are stacked on top of the power cord.
- ☐ Check condition of the power cord for wear, especially if it is exposed to traffic.
- ☐ Check for overall wear and repair or replace as necessary.
- ☐ Check for loose fasteners. Tighten as necessary.
- ☐ Check the condition of all warning and instruction labels. Replace as necessary.

Cleaning Exterior Surfaces

Keep exterior surfaces clean and grease free. Use a typical non-abrasive cleaner suitable for glass and plexiglass and a soft, lint-free cloth for guard-door windows. If exterior surfaces require more thorough cleaning, use a soft, lint-free cloth with a mild detergent and water and dry with a soft, lint-free cloth. **Never use harsh or abrasive cleaners or chemical agents when cleaning any part of the machine.**

Troubleshooting

The following table provides troubleshooting information for identifying and correcting possible problems.

Problem	Possible Cause	Corrective Action
1. Suction cups do not grab case blanks well.	1. Is there sufficient air supply pressure? 2. Are the suction cups turned on? (Or off?) 3. Have any suction cups come loose? 4. Loose or leaking air connection? Is there any leak evident in the air piping or tubing? 5. Is the Vacuum generator working properly?	1. Verify air supply meets specifications: 80 PSI @ 12 CFM. 2. There is a switch behind the suction cups that allows them to be turned on or off. Make sure they are switched on. 3. Make sure no suction cups have become loose. Reconnect or replace suction cups as required. 4. Check all air fittings and connections for loose connection or leaks. 5. Vacuum generator should normally provide 24cm Hg vacuum while the suction cups are grabbing a box.
2. Case blanks fail to open.	1. Is the base line in the magazine correct? 2. Is the bottom base line of the opening correct? 3. Is more than one box at a time being dispensed from the magazine into the erecting area? 4. Are the suction cups activating at the right time? Is the suction cup delay time is set	1. Check to make sure the base line in the magazine is correct. 2. Check to make sure the bottom base line of the opening is lining up correctly. 3. Perform box thickness calibration to dispense one box at a time. 4. Check suction cup delay times in the advanced settings. Correct delay

Problem	Possible Cause	Corrective Action
	correctly? 5. Is the score line aligned correctly with the separator pin?	time setting if necessary. 5. Check to make sure the scoring line is aligned correctly with the separator pin.
3. Cases do not open to fully 90°.	1. Is the base line in the magazine correct? 2. Is the opening structure 90°?	1. Check to make sure the base line in the magazine is correct. 2. Check cases to make sure they will open to 90°.

Problem	**Solution**
Uneven Tape Leg on Front	• Tape tension is too low. Tighten the one-way clutch roller and/or the tape core. • Adjust the one-way clutch roller in the slot so it is slightly beyond the front wipe roller. • Adjust the tape leg length. See Tape Leg Adjustment section.
Uneven Tape Leg Rear	• Too much tape tension. Adjust the one-way clutch and or tape core. • Clean and ensure all rollers move freely. Lubricate all roller slots. • Tighten main spring.
Uneven or Torn Tape 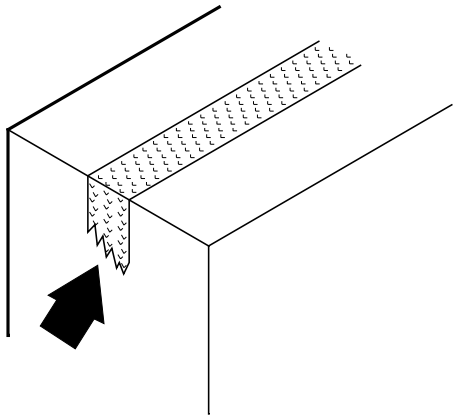	• Blade is dull. Replace blade. • Tape tension is incorrect. Increase tension. • Clean and adjust blade. • Blade mounted incorrectly or backwards. • Knife arm spring is worn. Replace knife arm spring. • Adjust cartridge height.

Problem	Solution
Tape Folding 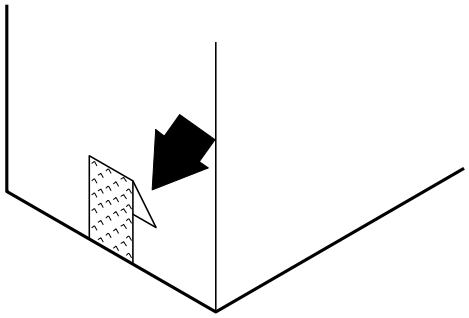	• Check that all rollers turn freely. • Check to be sure tape is threaded properly on front roller (page **Error! Bookmark not defined.**). • Check wipe down brush.
Tape Curling and Bunching Up 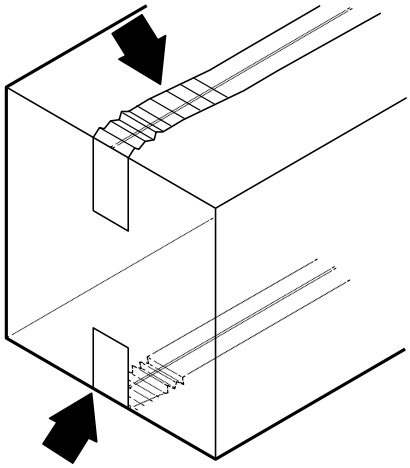	• Adjust the tape cartridge height (approximately .06 inches from box) 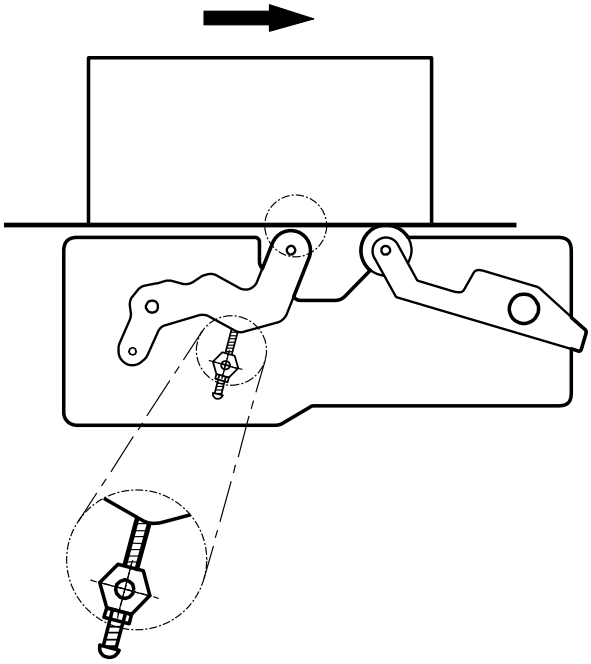 • Check tape tension set by the spring tension at the tape core.

Parts

Case Erector

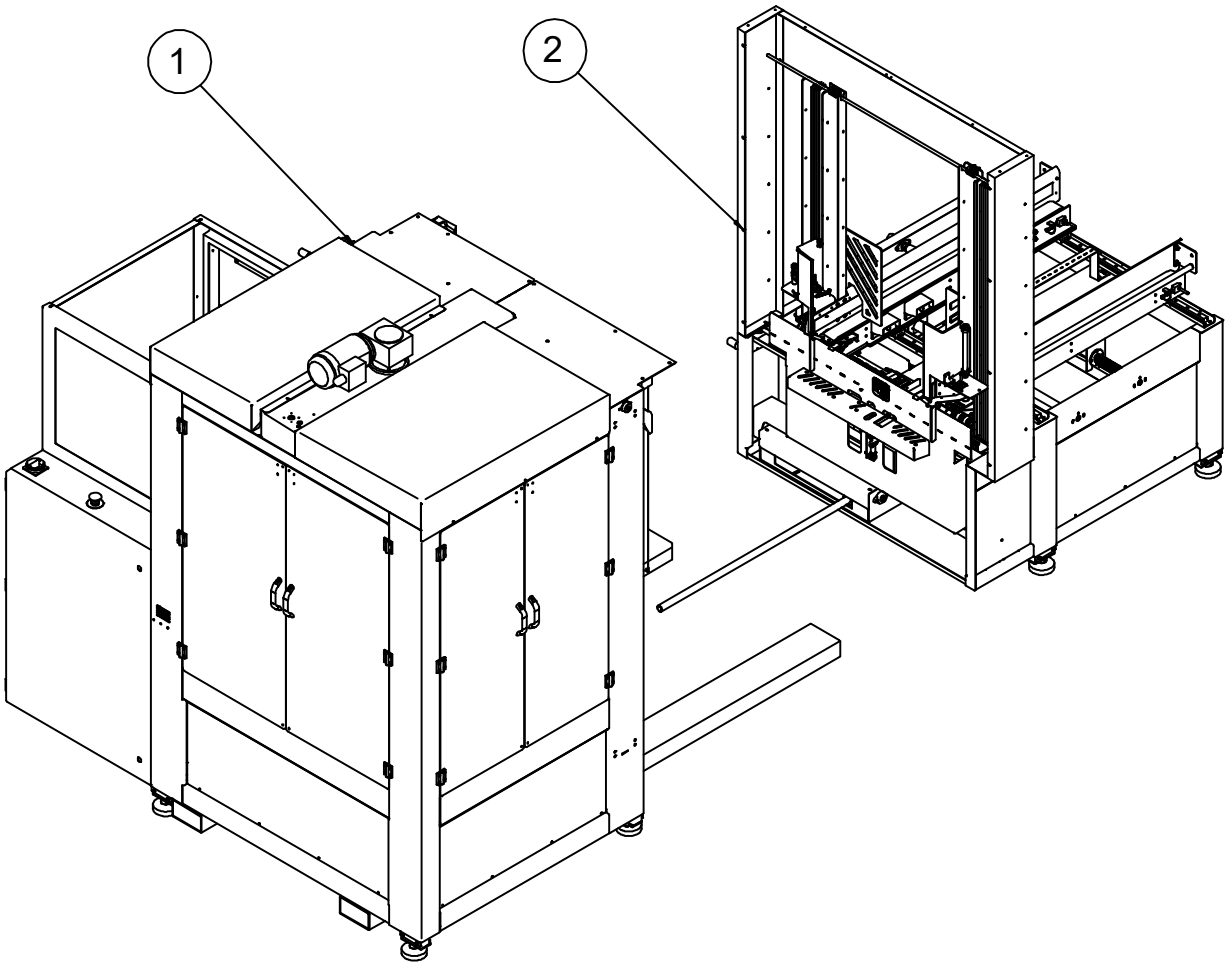

Case Erector				
Item	**Part Number**	**Description**	**Reference**	**Q'ty**
1	5030775	Forming Unit	***	1
2	5030776	Magazine Unit	***	1

Forming Unit

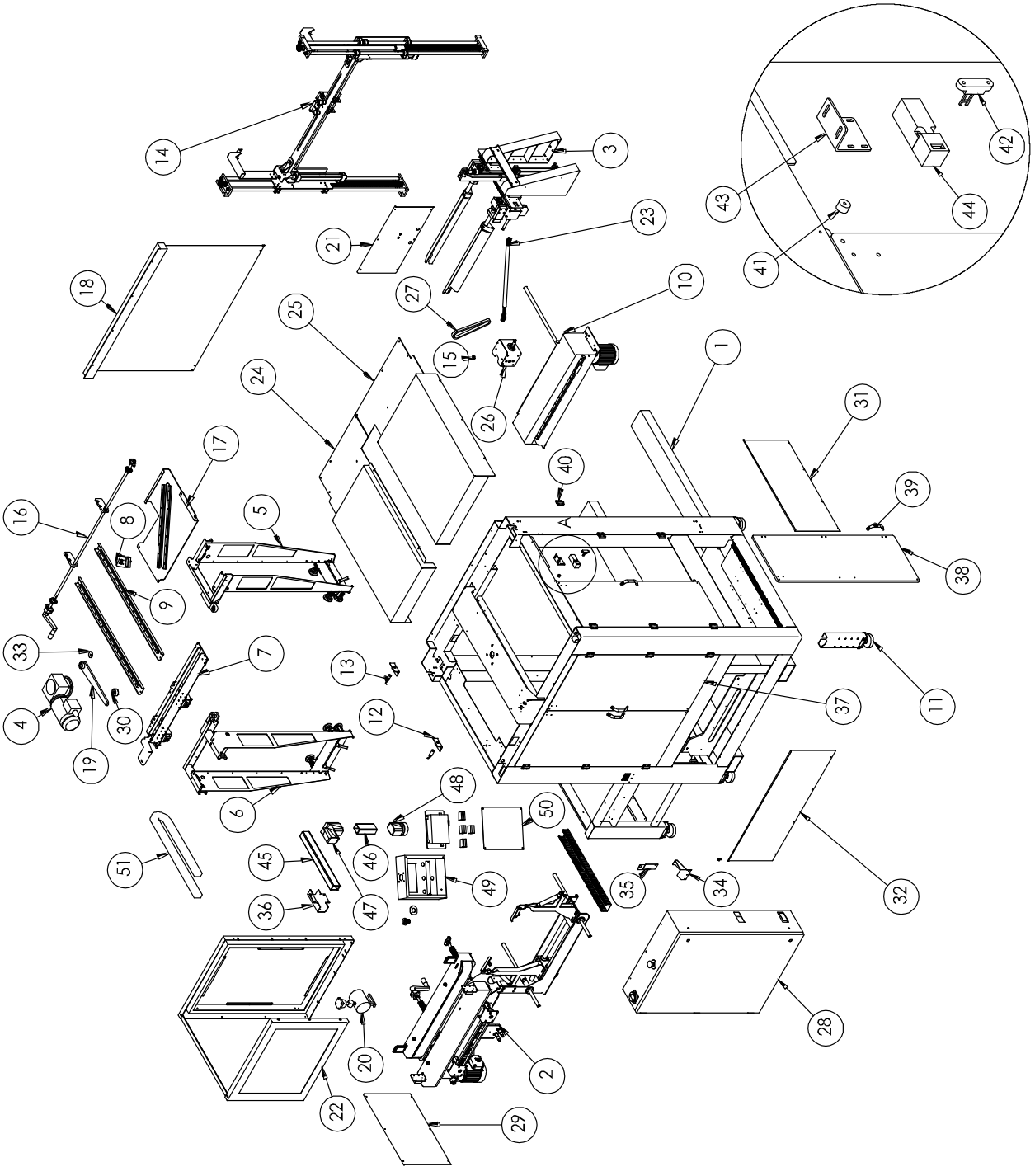

Forming Unit				
Item	**Part Number**	**Description**	**Reference**	**Q'ty**
1	5030778	Machine Body		1
2	5030779	Taper Unit	***	1
3	5030780	Major Flap Closer Unit	***	1
4	5030781	Motor, 220V/380V	P0503-0009300	1
5	5030782	Opener-W Unit	***	1
6	5030783	Opener-L Unit	***	1
7	5030784	Opener Guide Unit	***	1
8	5030785	Opener Cart Unit	***	1
9	5030786	Opener Track Unit	***	2
10	5030787	Box Feeder Unit	***	1
11	5030788	Stand Unit	***	6
12	5030789	Sensor Seat	P01-053730A	2
13.1	5030790	Box Feeder Prox, Exit	P0319-C13732	1
13.2	5030791	Box Feeder Prox, Entrance	P0319-C13731	
14	5030792	Top Pusher Unit	***	1
15	5030793	Screw M6*12l	P1101-0906012AN	1
16	5030794	Top Adjust Unit	***	2
17	5030795	Opener Cart Guide Unit	***	1
18	5030796	Flexible Protect	P06-0062600	1
19	5030797	Opener Arm	P01-053190B	1
20	5030798	Led Light	P0319-C13749	1
21	5030799	Cover		1
22	5030800	Exit Guard Unit	***	1
23	5030801	Adjust Connection	P1121-0000200	1
24	5030802	Top Cover Right		1
25	5030803	Top Cover Left		1
26	5030804	Adjust Connect Unit	***	1
27	5030805	Chain	P0702-0012100	1
28	5030806	Electric Box Unit	***	1
29	5030807	Cover		1
30	5030808	Opener Drive Unit	***	1
31	5030809	Cover		1
32	5030810	Cover		1

Forming Unit				
Item	**Part Number**	**Description**	**Reference**	**Q'ty**
33	5030811	Motor Arm Spacer	P01-0610700	1
34	5030778	Bracket	P01-052640A	1
35	5030812	Vacuum Generator Seat		
	5030813	Vacuum Generator	P0319-C13748	1
36	5030814	Fix Plate		1
37	5030815	Door	P06-006160A	2
38	5030816	Door	P06-006140A	2
39	5030817	Handle	P1112-0000700	4
40	5030818	Hinge	P1110-020000500	24
41	5030819	Magnetic	P1106-020000100	8
42	5030820	Safety Switch Key	P0311-030000100	4
43	5030821	Safety Switch Seat		4
44	5030822	Safety Switch	P0311-020000100	4
45	5030823	Connector 500mm	P02-0352900	1
46	5030824	Connector 140mm	P02-0353000	1
47	5030825	Connector 90 Degree	P02-0351800	1
48	5030826	Connector Seat	P02-0351700	1
49	5030827	Control Panel		1
50	5030828	Control Panel Cover		1
51	5030829	Cable Chain	P0319-C13738	4

Taper Unit

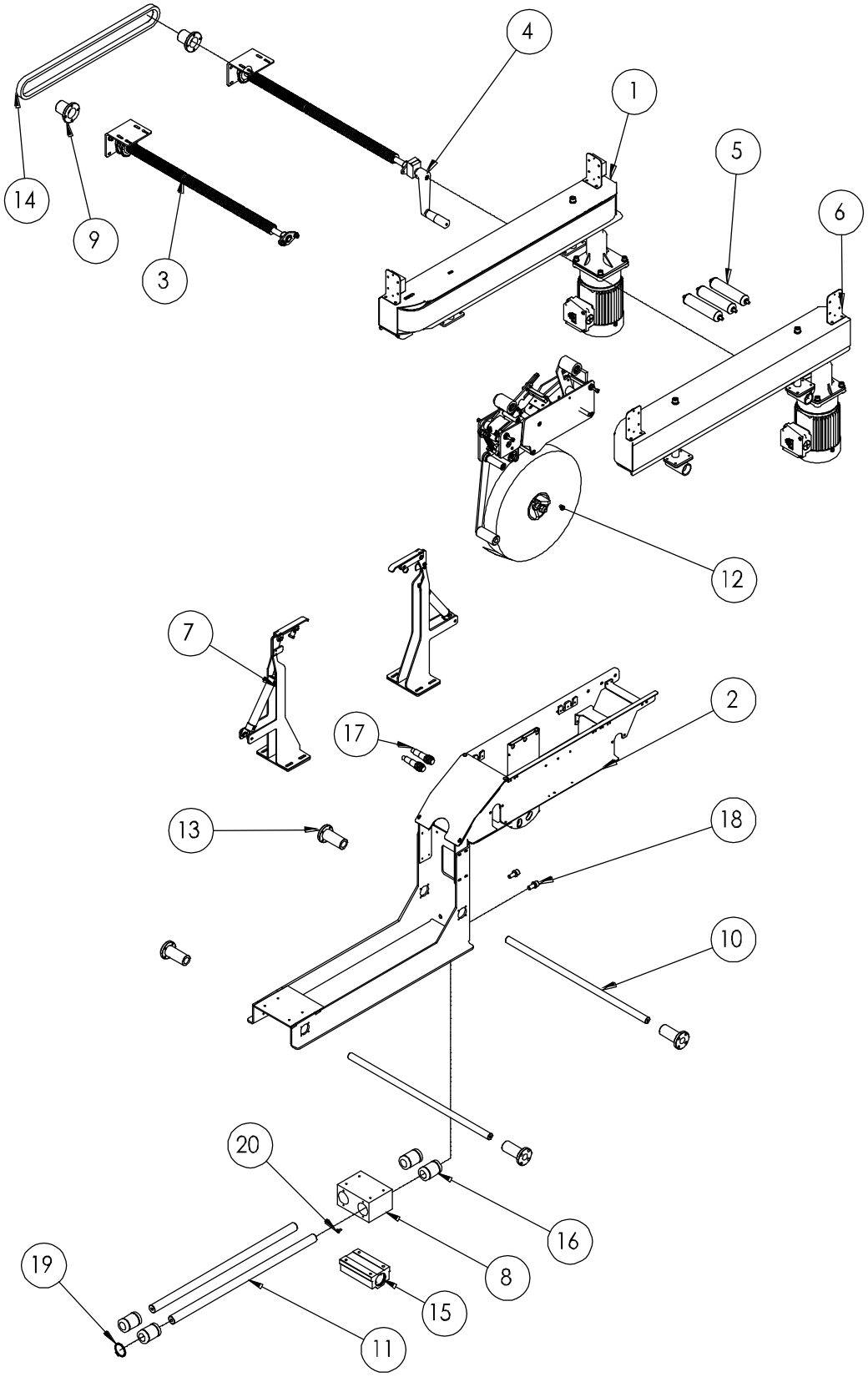

Taper Unit				
Item	**Part Number**	**Description**	**Reference**	**Q'ty**
1	5030831	Left Belt Unit	***	1
2	5030832	Taper Frame Unit	***	1
3	5030833	Adjust Front Unit	***	1
4	5030834	Adjust Rear Unit	***	1
5	5030835	Roller	P08-0003900	3
6	5030836	Right Belt Unit	***	1
7	5030837	Minor Flap Closer Unit	***	2
8	5030838	Sliding Block	P02-032690A	1
9	5030839	Sprocket	P02-0327100	2
10	5030840	Guide Shaft	P02-032720A	2
11	5030841	Guide Shaft	P02-032760B	2
12	5030842	Tape Head		1
13	5030843	Bushing	P1104-092001A	4
14	5030844	Chain	P0702-0012000	1
15	5030845	Linear Bearing	P1104-01251	1
16	5030846	Linear Bearing	P1104-01250	4
17.1	5030847	Sensor	P0302-020000600	2
17.2	5030848	Sensor Cable	P0302-050000200	2
18	5030849	Screw M10*25L	P1101-0910025AN	2
19	5030850	C Clip	P1105-0140B	1
20	5030851	Screw M5*10L	P1101-0105010AZ	1

Left Belt Unit

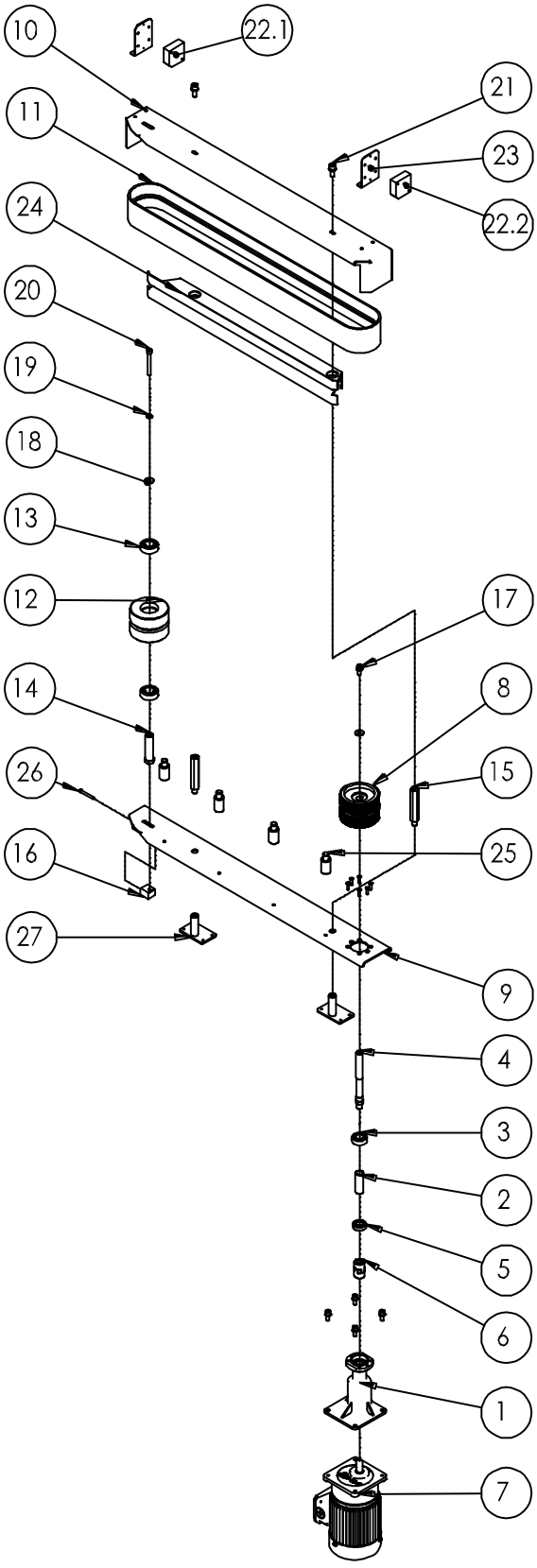

Left Belt Unit				
Item	**Part Number**	**Description**	**Reference**	**Q'ty**
1	5030853	Motor Seat	P02-0080300	1
2	5030854	Spacer	P02-0080400	1
3	5030855	Bearing	P1104-0262032RS0	1
4	5030856	Motor Shaft	P02-0323400	1
5	5030857	Bearing	P1104-026003ZZ0	1
6	5030858	Shaft Connect	P1121-0000100	1
7	5030859	Belt Motor - Left	P0503-0011300	1
8	5030860	Driving Pulley	P06-0061200	1
9	5030861	Belt Seat		1
10	5030862	Belt Cover		1
11	5030863	Belt 3"	P0902-0008600	1
12	5030864	Driven Pulley	P06-0061300	1
13	5030865	Bearing	P1104-026204ZZ0	2
14	5030866	Pulley Shaft	P02-0327700	1
15	5030867	Support	P02-0328500	2
16	5030868	Adjusting Block	P02-0327800	1
17	5030869	Screw M8*20l	P1101-0908020AN	5
18	5030870	Washer	P1103-01B122C5S	2
19	5030871	Spring Washer 8	P1103-0208Z	1
20	5030872	Screw M8*70L	P1101-0508070AN	1
21.1	5030849	Screw M10*25L	P1101-0910025AN	2
22.2	5030873	Entrance Sensor	P0319-C13716	1
22	5030874	Exit Sensor	P0319-C13717	1
23	5030875	Sensor Seat		2
24	5030876	Belt Guide		1
25	5030877	Rollller Shaft	P02-0323200	4
26	5030878	Screw M5*45L	P1101-1005045AZ	1
27	5030879	Seat	P02-0393100	2

Right Belt Unit

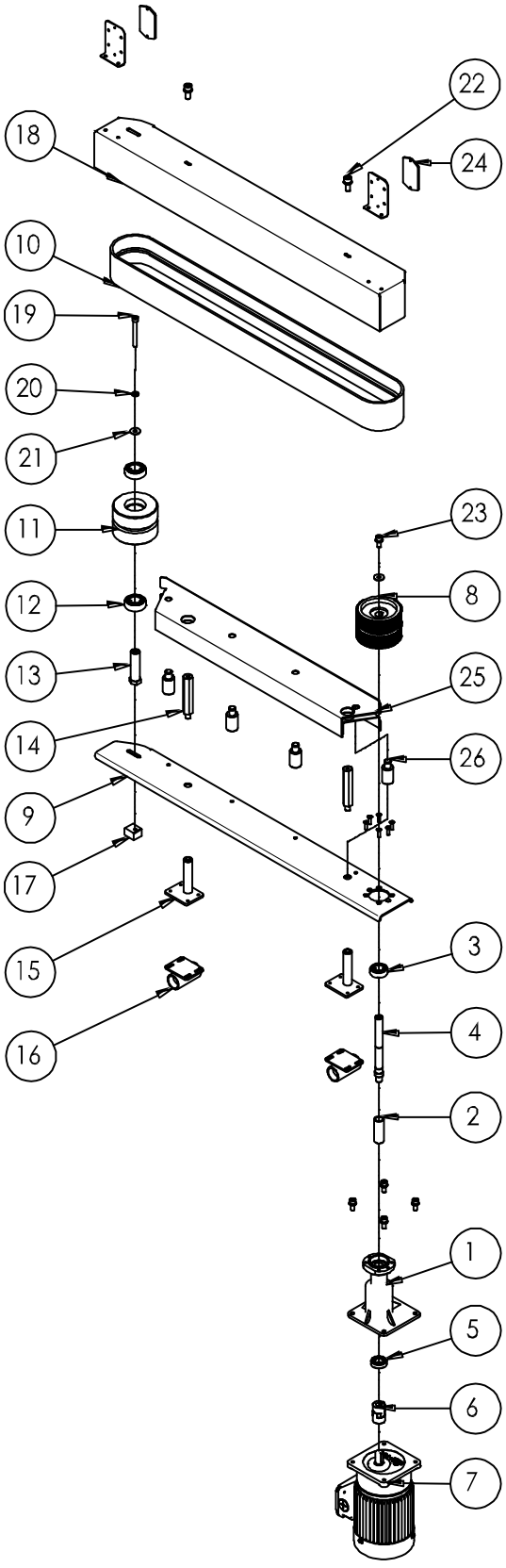

Right Belt Unit				
Item	**Part Number**	**Description**	**Reference**	**Q'ty**
1	5030853	Motor Seat	P02-0080300	1
2	5030854	Spacer	P02-0080400	1
3	5030855	Bearing	P1104-0262032RS0	1
4	5030856	Motor Shaft	P02-0323400	1
5	5030857	Bearing	P1104-026003ZZ0	1
6	5030858	Shaft Connect	P1121-0000100	1
7	5030881	Belt Motor - Right	P0503-0012100	1
8	5030860	Driving Pulley	P06-0061200	1
9	5030882	Belt Seat		1
10	5030863	Belt 3"	P0902-0008600	1
11	5030864	Driven Pulley	P06-0061300	1
12	5030865	Bearing	P1104-026204ZZ0	2
13	5030866	Pulley Shaft	P02-0327700	1
14	5030867	Support	P02-0328500	2
15	5030883	Seat	P02-032790A	2
16	5030884	Thread Rod Seat	P02-0393200	2
17	5030868	Adjusting Block	P02-0327800	1
18	5030885	Belt Cover		1
19	5030872	Screw M8*70L	P1101-0508070AN	1
20	5030871	Spring Washer 8	P1103-0208Z	1
21	5030870	Washer	P1103-01B122C5S	2
22	5030849	Screw M10*25L	P1101-0910025AN	2
23	5030869	Screw M8*20L	P1101-0908020AN	5
24	5030886	Reflection Plate	P0302-020002600	2
25	5030887	Belt Guide		1
26	5030888	Roller Shaft	P02-0323200	4
27	5030889	Sensor Seat	P02-0080300	2

Taper Frame Unit

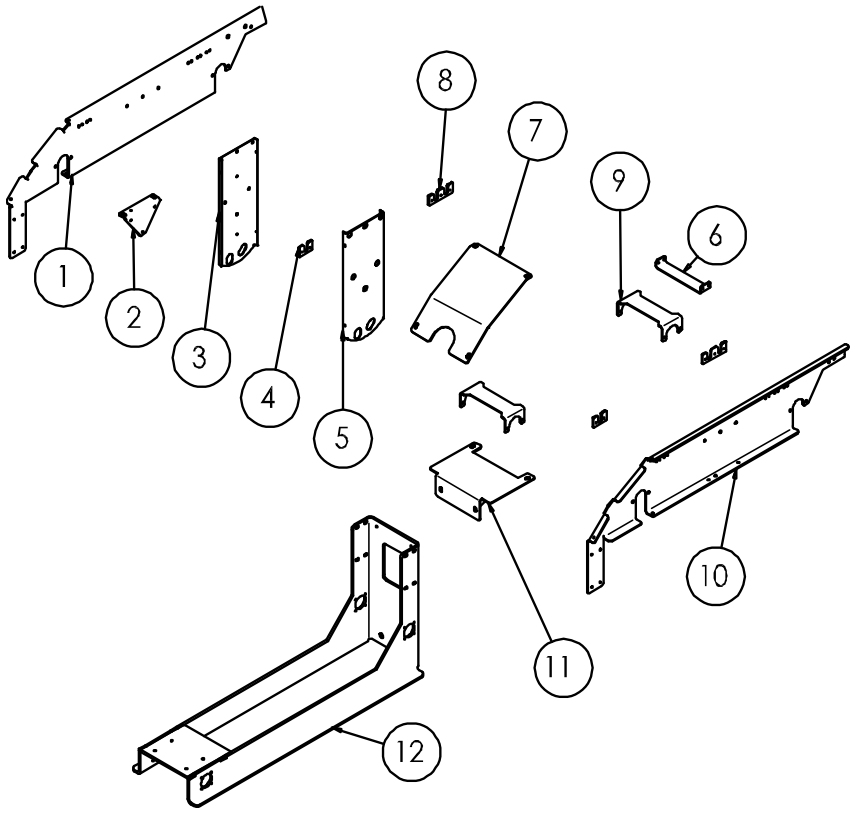

Taper Frame Unit				
Item	**Part Number**	**Description**	**Reference**	**Q'ty**
1	5030891	SEAT-LEFT		1
2	5030892	BRACKET		1
3	5030893	SENSOR PLATE		1
4	5030894	MOUNTING BLOCK	P01-013510A	2
5	5030895	SENSOR PLATE		1
6	5030896	ROLLER BRACKET		1
7	5030897	GUIDE PLATE		1
8	5030898	MOUNTING BLOCK	P01-013520A	2
9	5030899	CONNECT PLATE		2
10	5030900	SEAT-RIGHT		1
11	5030901	SUPPORT		1
12	5030902	SEAT		1

Adjust Front Unit

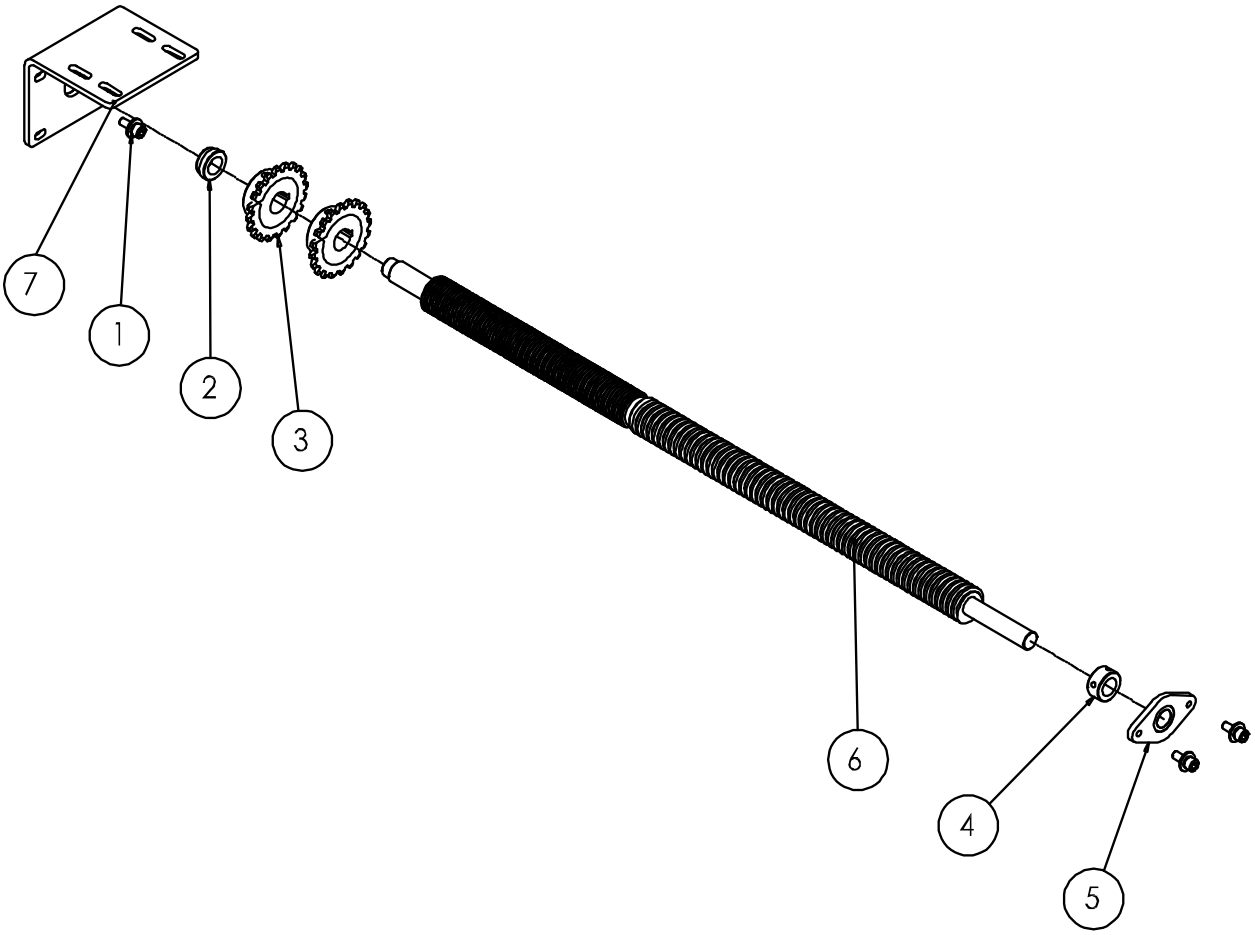

Adjust Front Unit				
Item	**Part Number**	**Description**	**Reference**	**Q'ty**
1	5030793	SCREW M6*12L	P1101-0906012AN	3
2	5030904	BUSHING	P02-0088800	1
3	5030905	SPROCKET	P0702-0010500	2
4	5030906	FIX RING	P02-0083500	1
5	5030907	SEAT	P01-0135000	1
6	5030908	THREAD ROD FRONT	P02-032830A	1
7	5030909	SUPPORT		1

Adjust Rear Unit

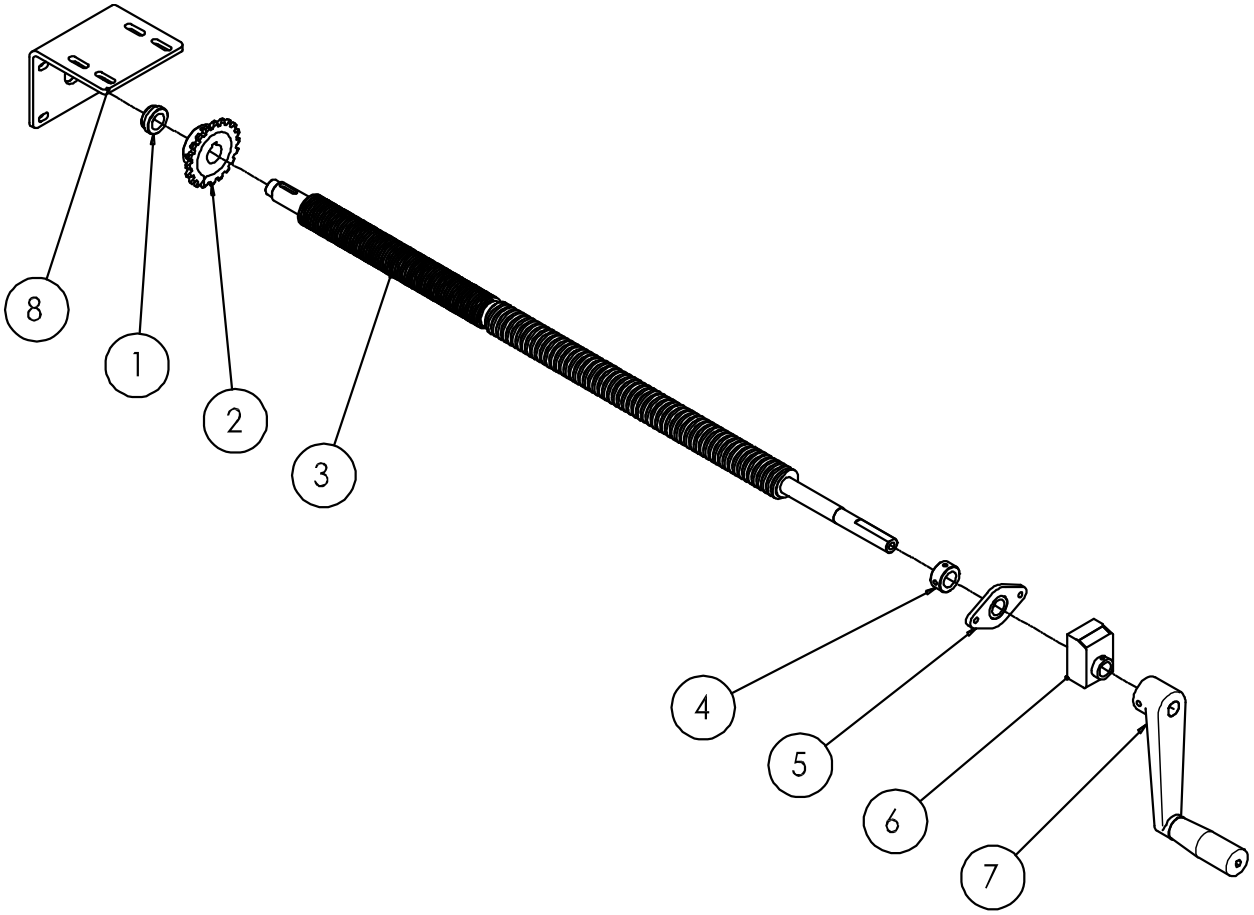

Adjust Rear Unit				
Item	**Part Number**	**Description**	**Reference**	**Q'ty**
1	5030904	BUSHING	P02-0088800	1
2	5030905	SPROCKET	P0702-0010500	1
3	5030911	THREAD ROD REAR	P02-032680B	1
4	5030906	FIX RING	P02-0083500	1
5	5030907	SEAT	P01-0135000	1
6	5030912	INDICATOR	P1130-0000100	1
7	5030913	HANDLE	P1112-0000300	1
8	5030914	SUPPORT		1

Minor Flap Closer Unit

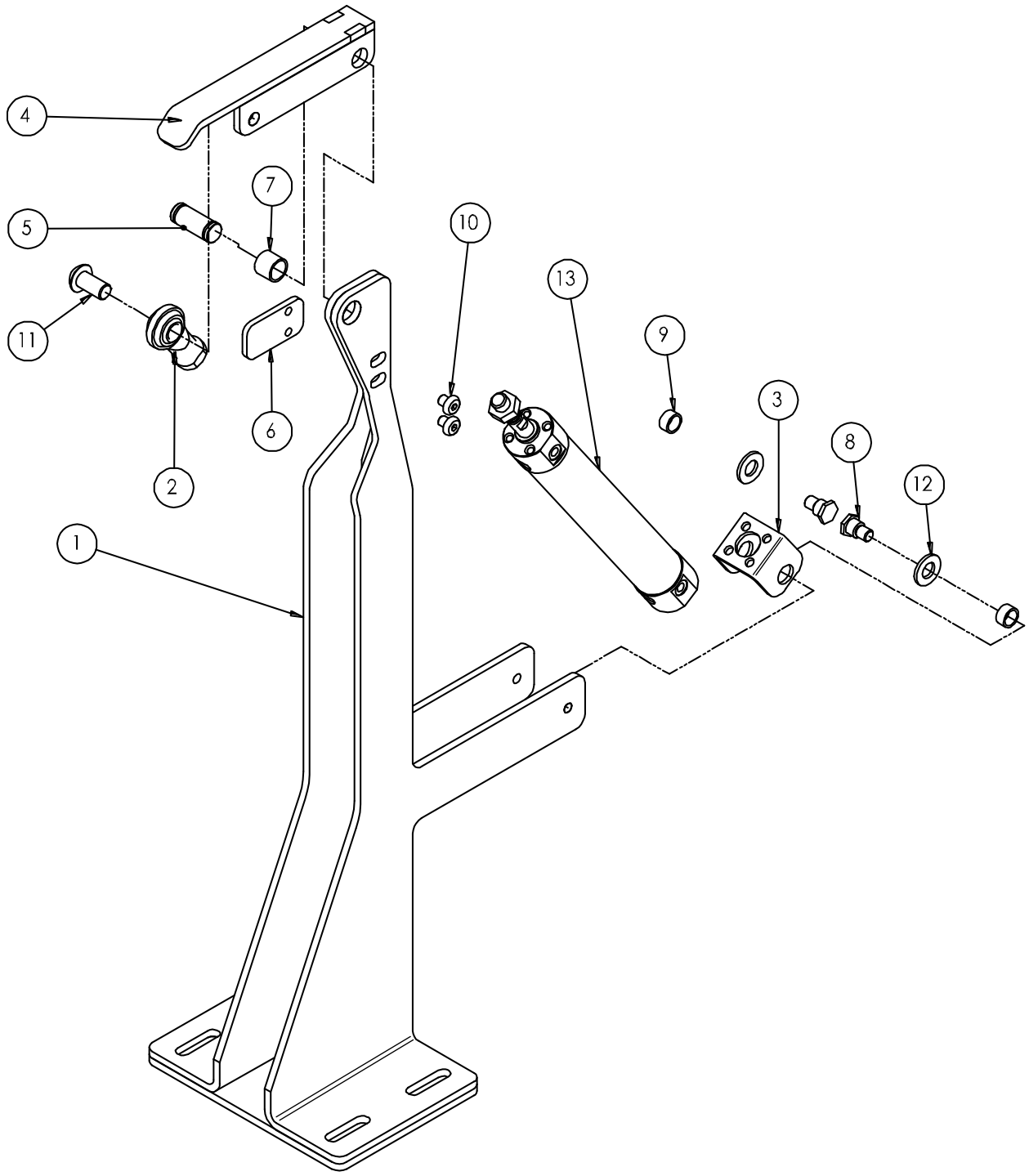

Minor Flap Closer Unit				
Item	**Part Number**	**Description**	**Reference**	**Q'ty**
1	5030916	SEAT		1
2	5030917	ROD END	P1104-060000800	1
3	5030918	FIX PLATE	P01-0535000	1
4	5030919	MINOR FLAP CLOSER	P01-053480B	1
5	5030920	PIN SHAFT	P02-0326600	1
6	5030921	STOPPER	P01-053520B	1
7	5030922	BUSHING	P1104-081012100	1
8	5030923	SHOULDER SCREW	P02-0081600	2
9	5030924	BUSHING	P1104-080810050	2
10	5030925	SCREW M5*6L	P1101-0605006AN	2
11	5030926	SCREW M8*16L	P1101-0608016AN	1
12	5030927	WASHER 8	P1103-010816C5Z	2
13.1	5030928	CYLINDER - FRONT	P0319-C13722	1
13.2	5030929	CYLINDER - REAR	P0319-C13723	1

Major Flap Closer Unit

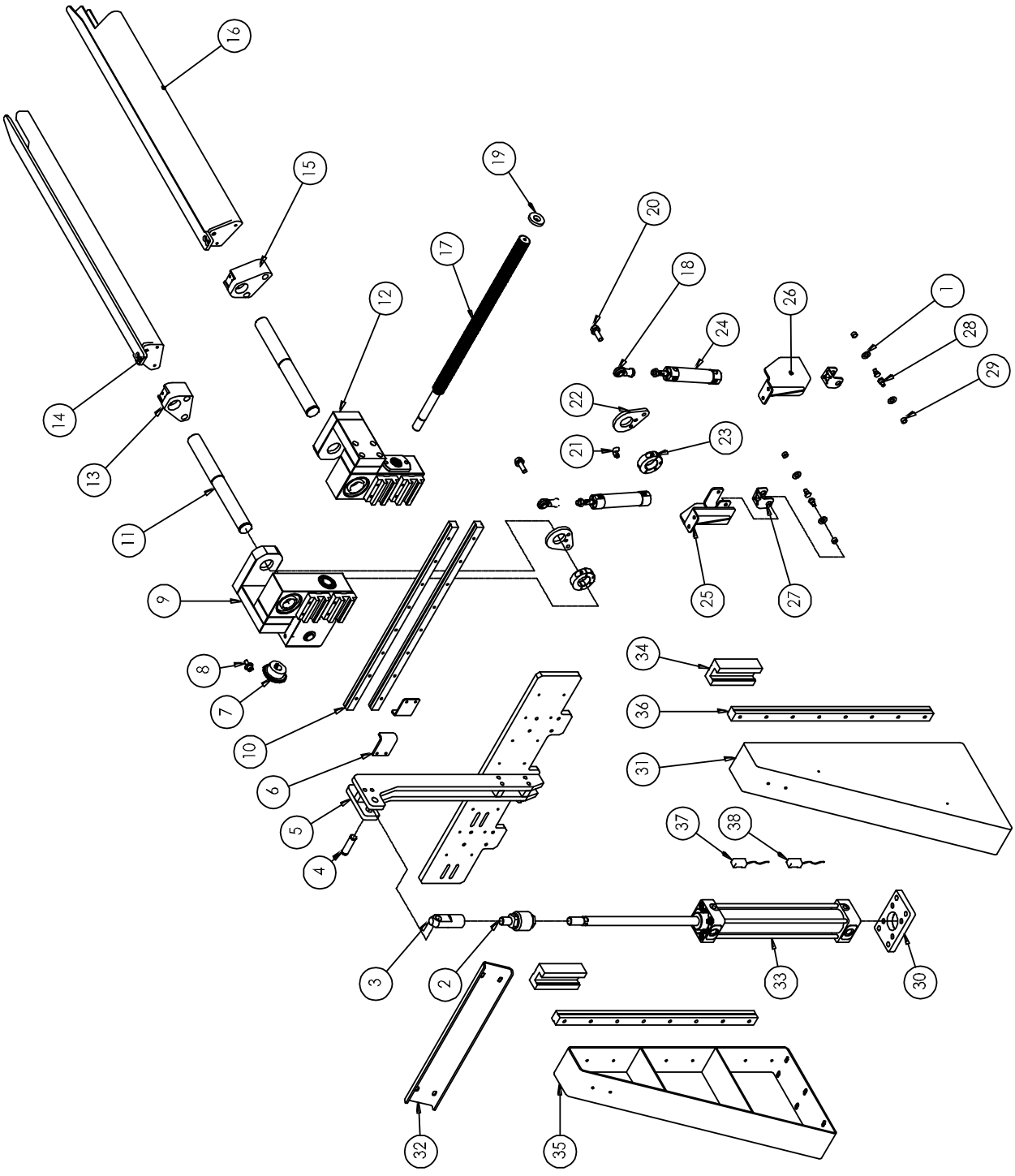

Major Flap Closer Unit				
Item	**Part Number**	**Description**	**Reference**	**Q'ty**
1	5030927	WASHER 8	P1103-010816C5Z	4
2	5030931	ROD END	P0403-050000200	1
3	5030932	I CONNECTOR	P0403-020000600	1
4	5030933	PIN	P02-0325600	1
5	5030934	MAJOR FLAP CLOSER SEAT UNIT	***	1
6	5030935	STOPPER	P01-0613800	2
7	5030936	BEVEL GEAR	P0701-0003000	1
8	5030793	SCREW M6*12L	P1101-0906012AN	1
9	5030937	LEFT SEAT UNIT	***	1
10	5030938	LINEAR GUIDE	P1104-140000500	2
11	5030939	SHAFT	C137-P01-0461A	2
12	5030940	RIGHT SEAT UNIT	***	1
13	5030941	ROTATING BLOCK - LEFT	P02-0393300	1
14	5030942	ROTATING SEAT - LEFT	P01-053270C	1
15	5030943	ROTATING BLOCK - RIGHT	P02-0393400	1
16	5030944	ROTATING SEAT - RIGHT	P01-053290C	1
17	5030945	ADJUST THREAD ROD	P02-032640A	1
18	5030917	ROD END	P1104-060000800	2
19	5030946	WASHER 6	P01-0058700	1
20	5030947	SCREW M8*100L	P1101-1008100AZ	2
21	5030948	CYLINDER CONNECT	P0401-0002600	1
22	5030949	FIX PLATE		2
23	5030950	FIX RING	P02-0351900	2
24	5030951	ROTATING CYLINDER	P0319-C13724	2
25	5030952	CYLINDER BRACKET - RIGHT		1
26	5030953	CYLINDER BRACKET - LEFT		1
27	5030954	CYLINDER FIX PLATE		2
28	5030923	SHOULDER SCREW	P02-0081600	4
29	5030924	BUSHING	P1104-080810050	4
30	5030955	CYLIDNER SEAT	P0403-020000800	1
31	5030956	FIX SEAT - LEFT	P01-053330A	1
32	5030957	REINFORCE BRACKET	P01-0533400	1
33	5030958	MAJOR FLAP CLOSER CYLINDER	P0319-C13745	1

Major Flap Closer Unit				
Item	**Part Number**	**Description**	**Reference**	**Q'ty**
34	5030959	SLIDING BLOCK	P1104-140000800	2
35	5030960	FIX SEAT - RIGHT	P01-053320A	1
36	5030961	LINEAR BUIDE	P1104-140000900	2
37	5030732	CYLINDER SENSOR	P0319-C13747	1
38	5030736	CYLINDER SENSOR	P0319-C13748	1

Major Flap Closer Seat Unit

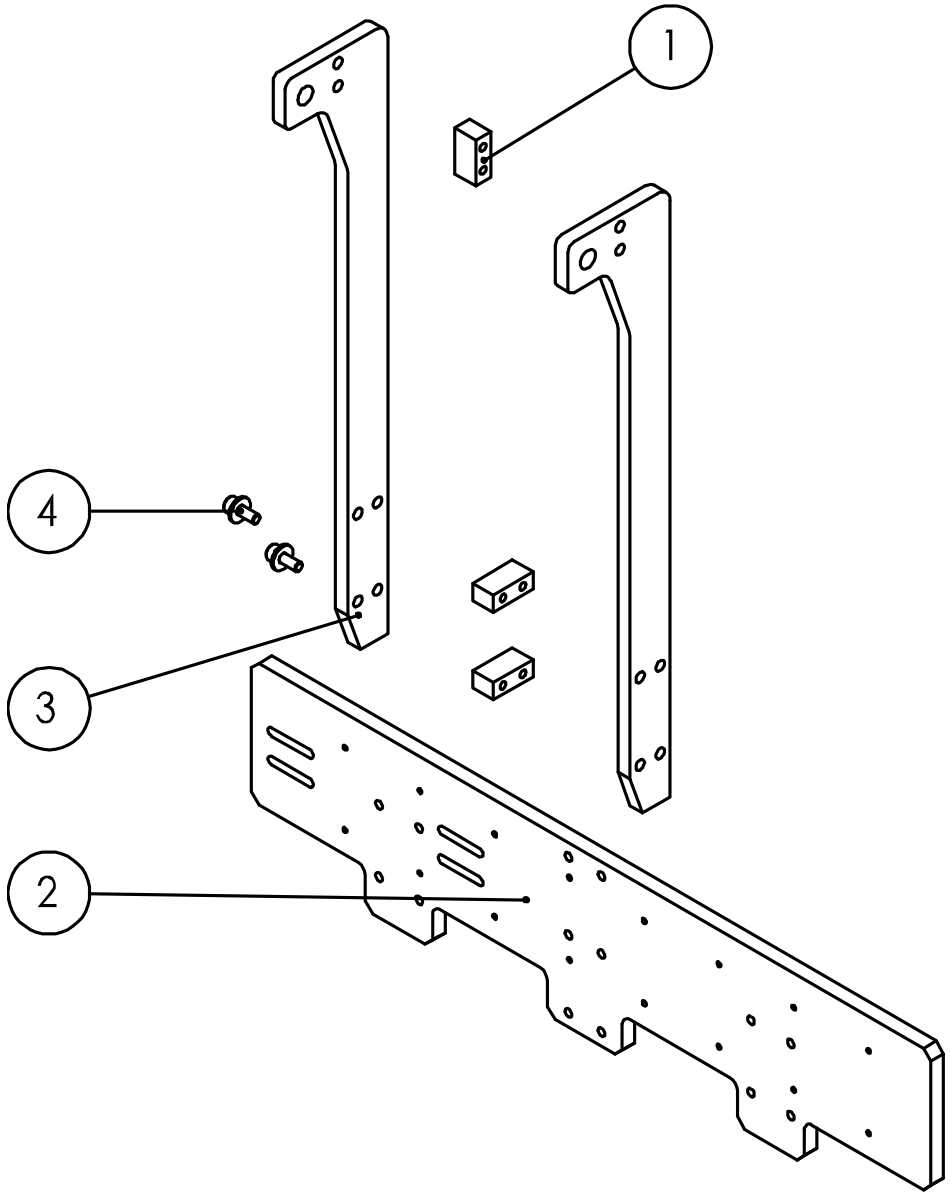

Major Flap Closer Seat Unit				
Item	**Part Number**	**Description**	**Reference**	**Q'ty**
1	5030963	Connect Block		3
2	5030964	Seat		1
3	5030965	Fix Block		2
4	5030793	Screw M6*12L	P1101-0906012AN	2

Left Seat Unit

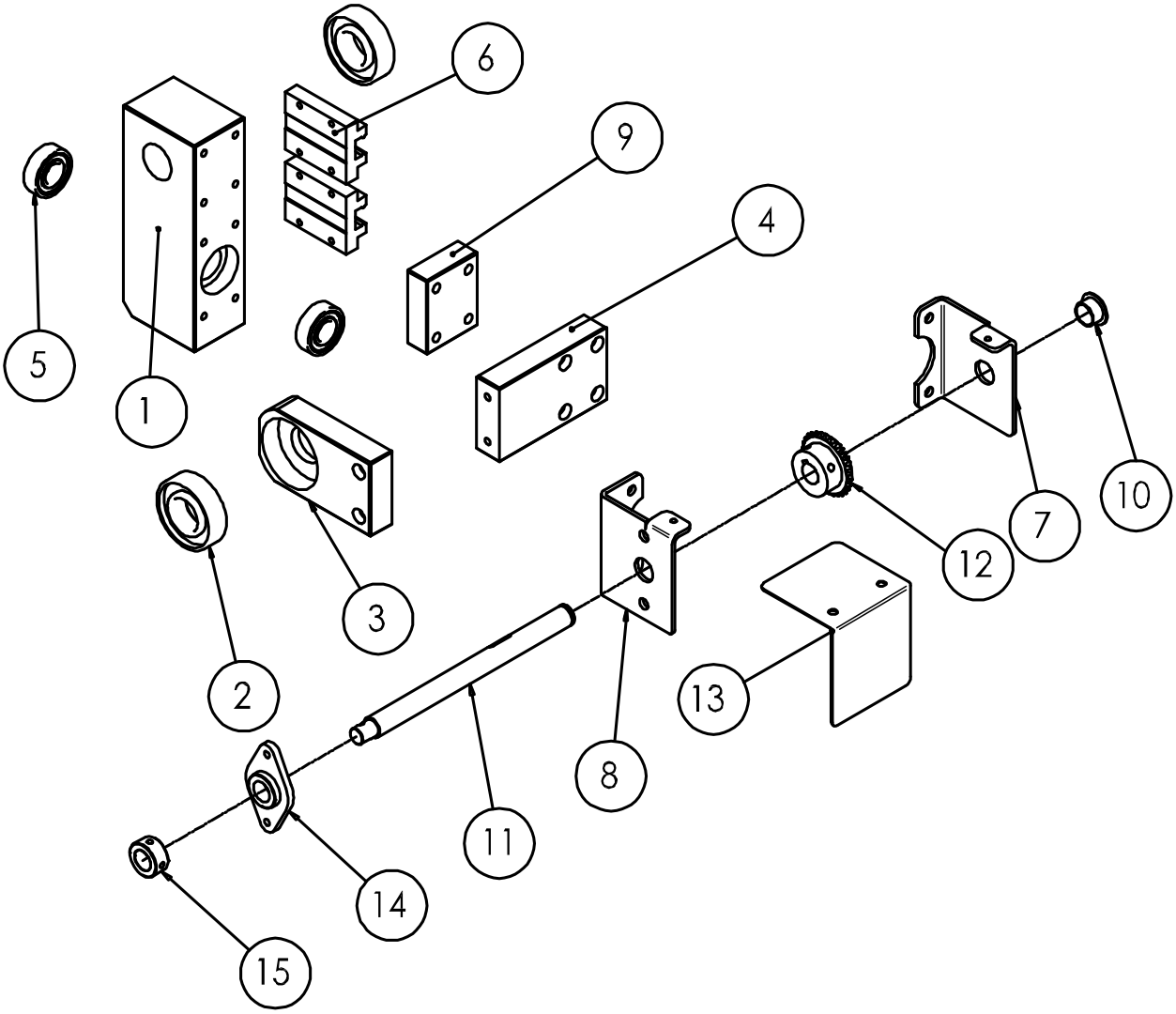

Left Seat Unit				
Item	**Part Number**	**Description**	**Reference**	**Q'ty**
1	5030967	Seat - Left		1
2	5030968	Bearing	P1104-026205ZZ0	2
3	5030969	Bearing Seat	P02-032590A	1
4	5030970	Block		1
5	5030971	Bearing	P1104-026202ZZ0	2
6	5030972	Sliding Block	P1104-140001000	2
7	5030973	Shaft Fixer - Front		1
8	5030974	Shaft Fixer - Rear		1
9	5030975	Connect Block		1
10	5030976	Bushing	P1104-0315100	1
11	5030977	Shaft	P02-0326200	1
12	5030978	Bevel Gear	P0701-0004400	1
13	5030979	Cover		1
14	5030980	Bushing Seat	P01-0135000	1
15	5030906	Fix Ring	P02-0083500	1

Right Seat Unit

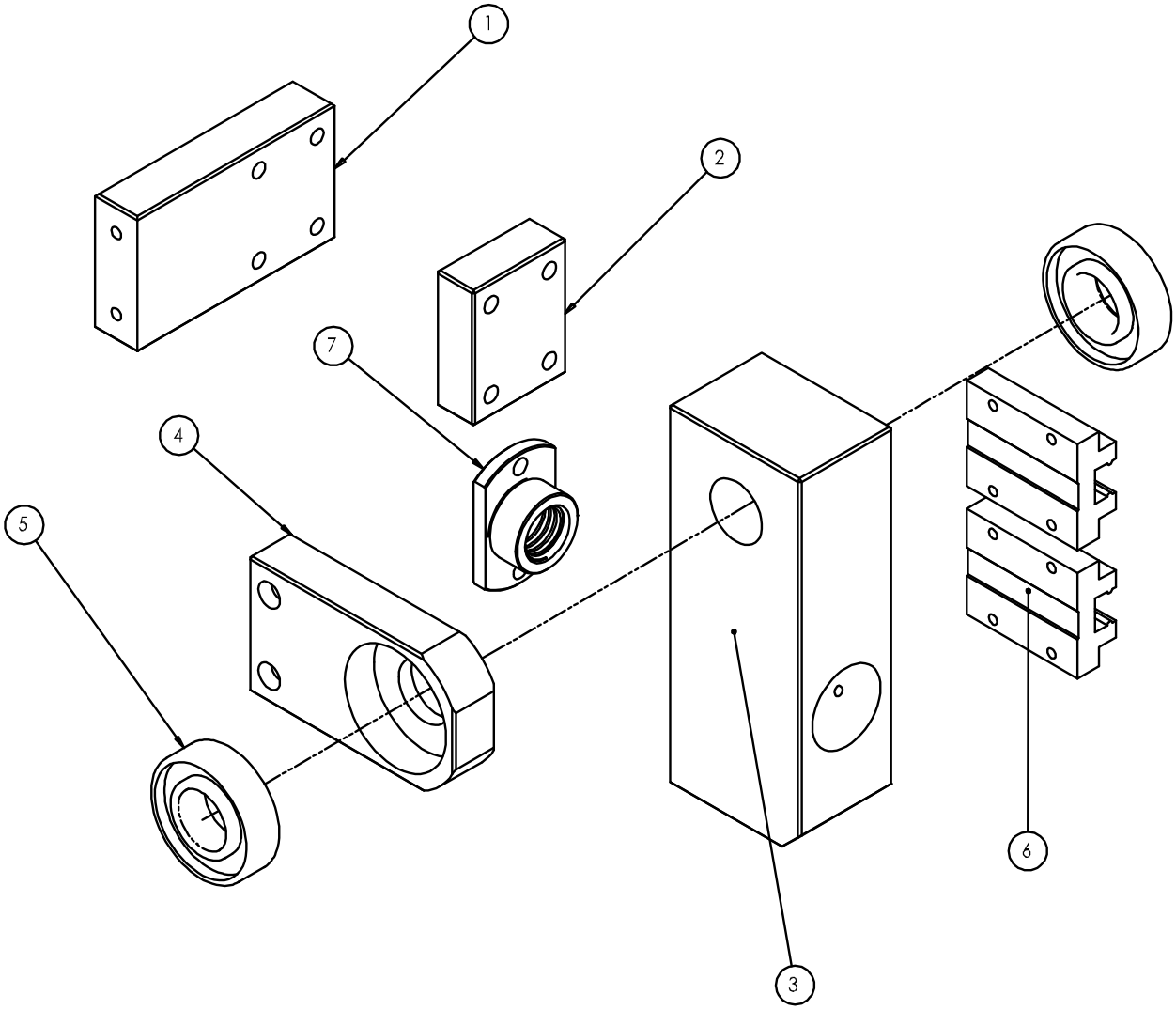

Right Seat Unit				
Item	**Part Number**	**Description**	**Reference**	**Q'ty**
1	5030982	Block		1
2	5030983	Connect Block		1
3	5030984	Seat - Right		1
4	5030969	Bearing Seat	P02-032590A	1
5	5030968	Bearing	P1104-026205ZZ0	2
6	5030972	Sliding Block	P1104-140001000	2
7	5030985	Adjust Block	P02-0328400	1

Opener–W Unit

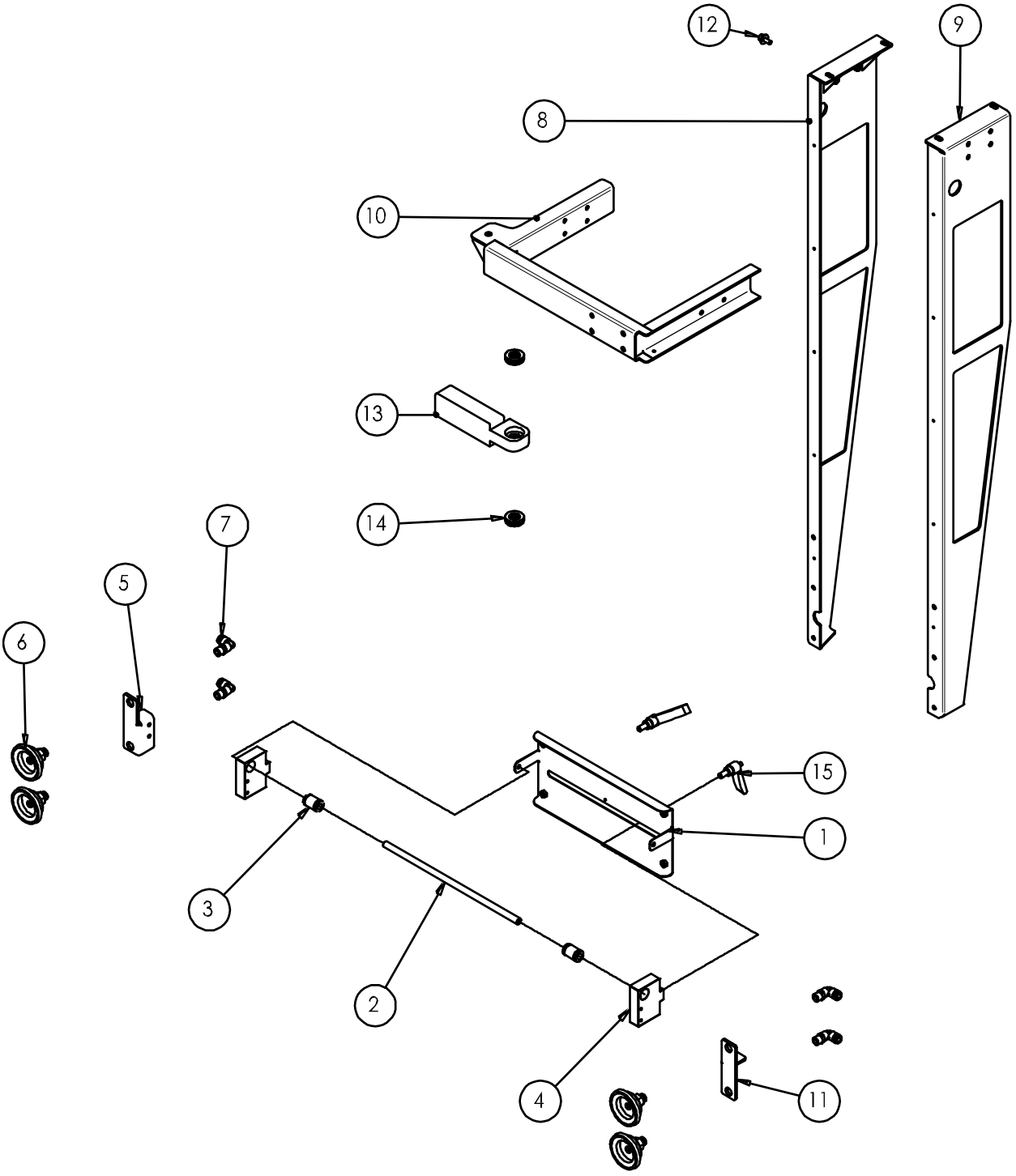

Opener–W Unit				
Item	**Part Number**	**Description**	**Reference**	**Q'ty**
1	5030987	FIX PLATE		1
2	5030988	SHAFT	P02-0323500	1
3	5030989	LINEAR BUSHING	P1104-01100	2
4	5030990	SUCTIONS SEAT	P02-032360B	2
5	5030991	SUCTIONS FIX PLATE - LEFT	P01-0531300	1
6	5030992	SUCTIONS UNIT	***	4
7	5030993	CONNECTOR 90 DEGREE	P0401-0001200	4
8	5030994	BRACKET - RIGHT		1
9	5030995	BRACKET - LEFT		1
10	5030996	BRACKET FRAME		1
11	5030997	SUCTIONS FIX PLATE - RIGHT	P01-0531400	1
12	5030793	SCREW M6*12L	P1101-0906012AN	1
13	5030998	HINGE	P02-032950A	1
14	5030999	BEARING	P1104-220000100	2
15	5031000	HANDLE	P1112-0003000	2

Opener–L Unit

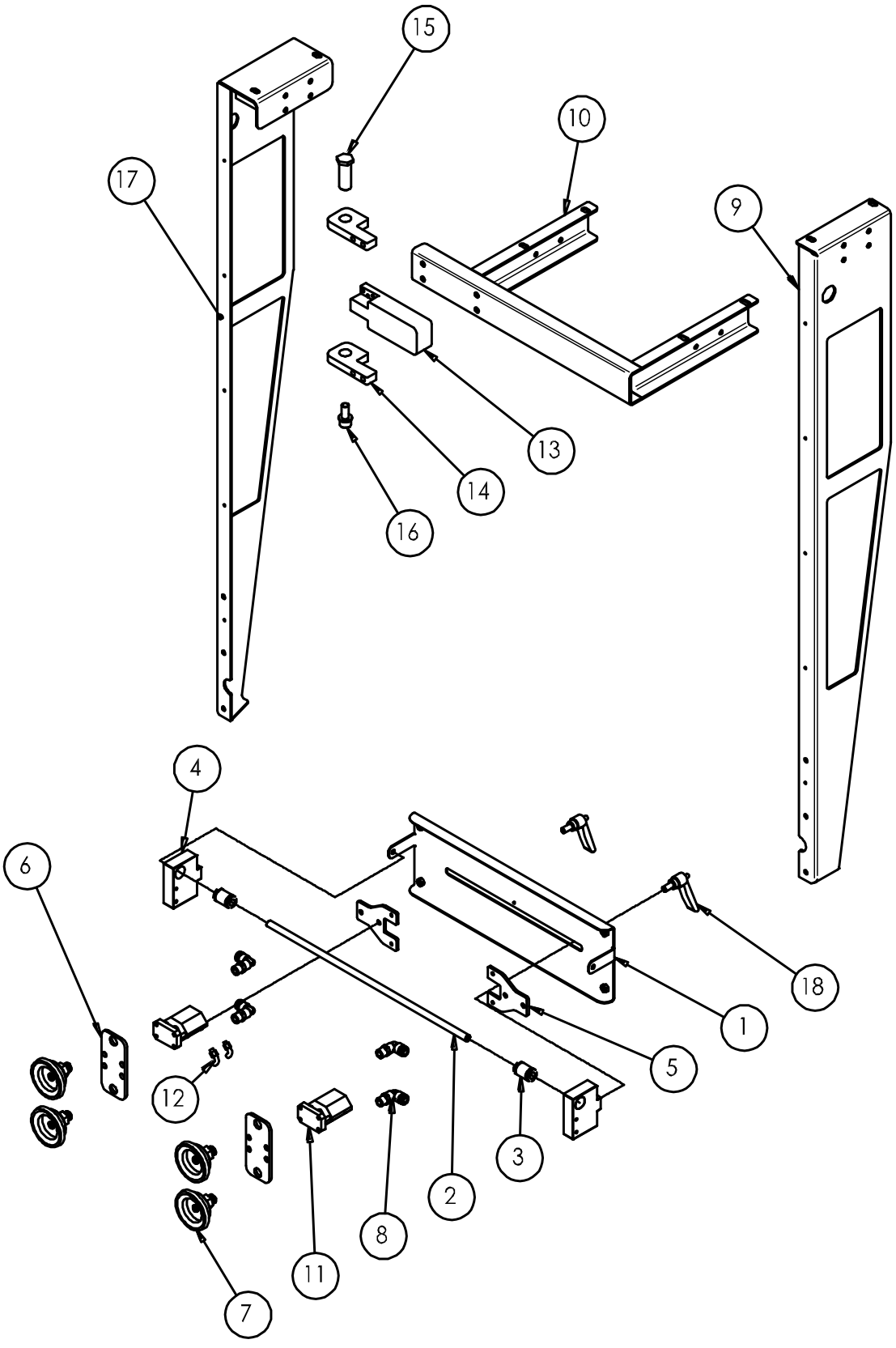

Opener–L Unit				
Item	**Part Number**	**Description**	**Reference**	**Q'ty**
1	5031002	Fix Plate		1
2	5031003	Shaft	P02-0323700	1
3	5030989	Linear Bushing	P1104-01100	2
4	5030990	Suctions Seat	P02-032360B	2
5	5031004	Cylinder Fix Plate		2
6	5031005	Suctions Fix Plate	P01-0531200	2
7	5031013	Suctions Unit	***	4
8	5030993	Connector 90 Degree	P0401-0001200	4
9	5031006	Bracket - Left		1
10	5031007	Bracket Frame		1
11	5030749	Cylinder	P0319-C13721	2
12	5031008	Connector	P0401-0002600	2
13	5031009	Hinge	P02-0329300	1
14	5031010	Hinge Fixer	P02-0352800	2
15	5031011	Shaft	P02-032910A	1
16	5030849	Screw M10*25L	P1101-0910025AN	1
17	5031012	Bracket - Right		1
18	5031000	Handle	P1112-0003000	2

Suction Unit

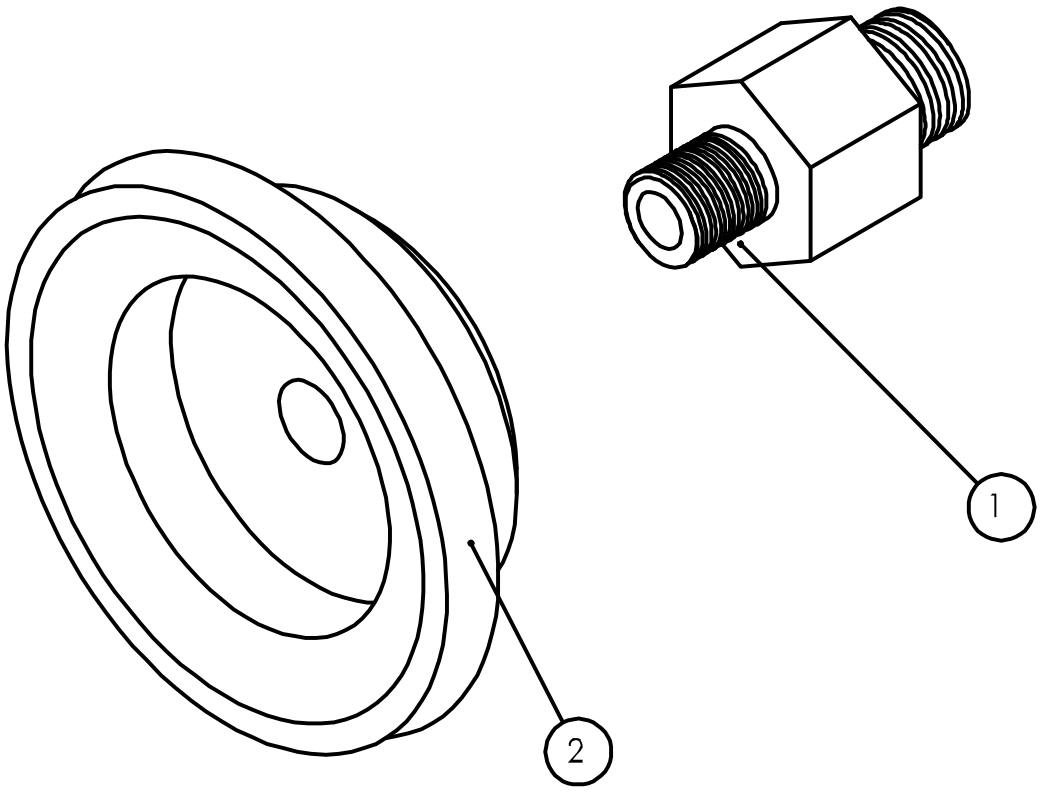

Suction Unit				
Item	**Part Number**	**Description**	**Reference**	**Q'ty**
1	5031014	Connector	P02-0330100	1
2	5030745	Suction Cups	P0407-020000200	1

Opener Guide Unit

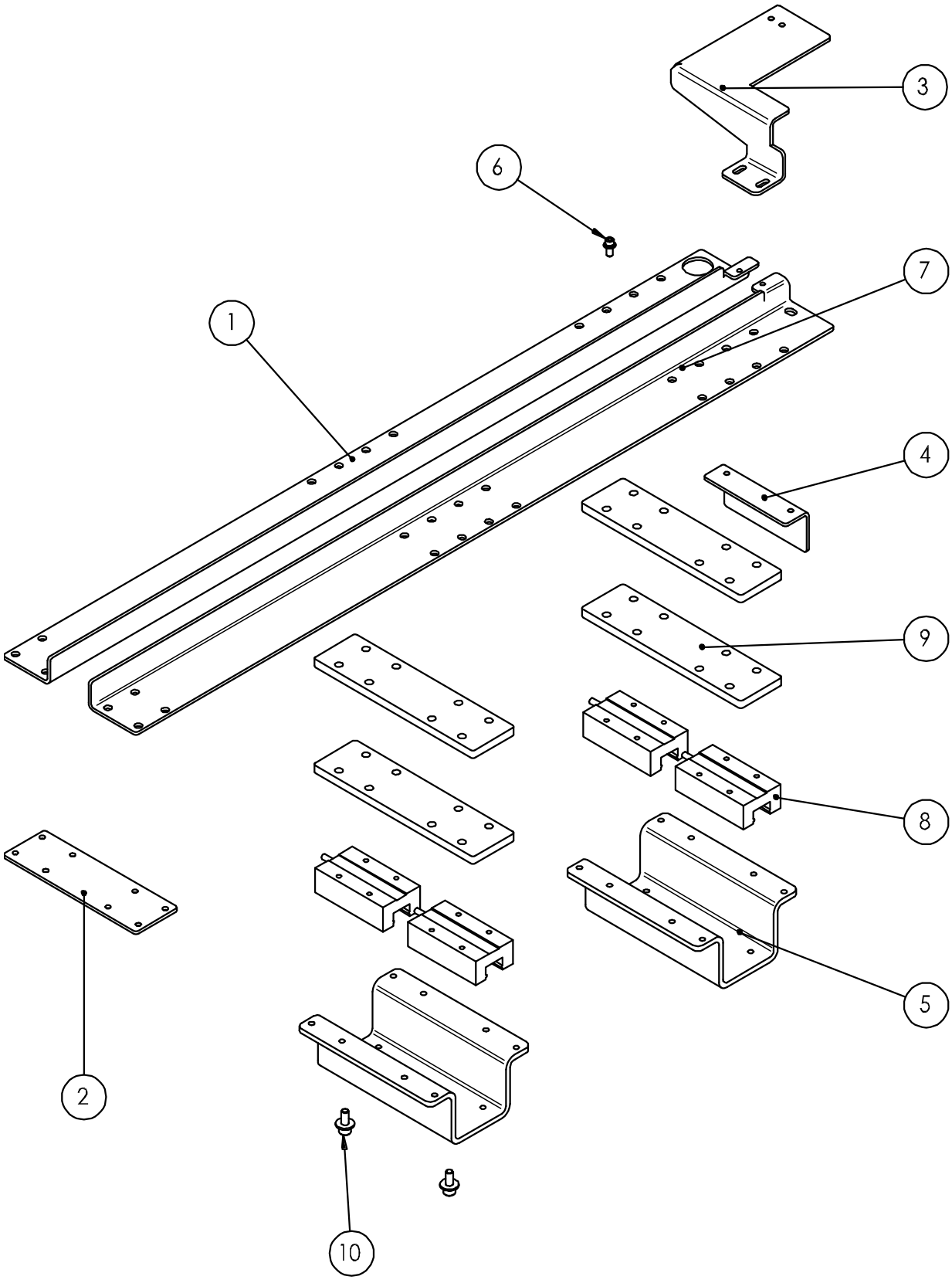

Opener Guide Unit				
Item	**Part Number**	**Description**	**Reference**	**Q'ty**
1	5031016	Guide Left		1
2	5031017	Connect Plate		1
3	5031018	Cable Chain Fixer		1
4	5031019	Sensor Plate	P01-0532300	1
5	5031020	Fix Plate		2
6	5031021	Screw M5*12L	P1101-0905012AN	1
7	5031022	Guide Right		1
8	5031023	Sliding Guide	P1104-140000300	4
9	5031024	Spacer		4
10	5030793	Screw M6*12L	P1101-0906012AN	2

Opener Cart Unit

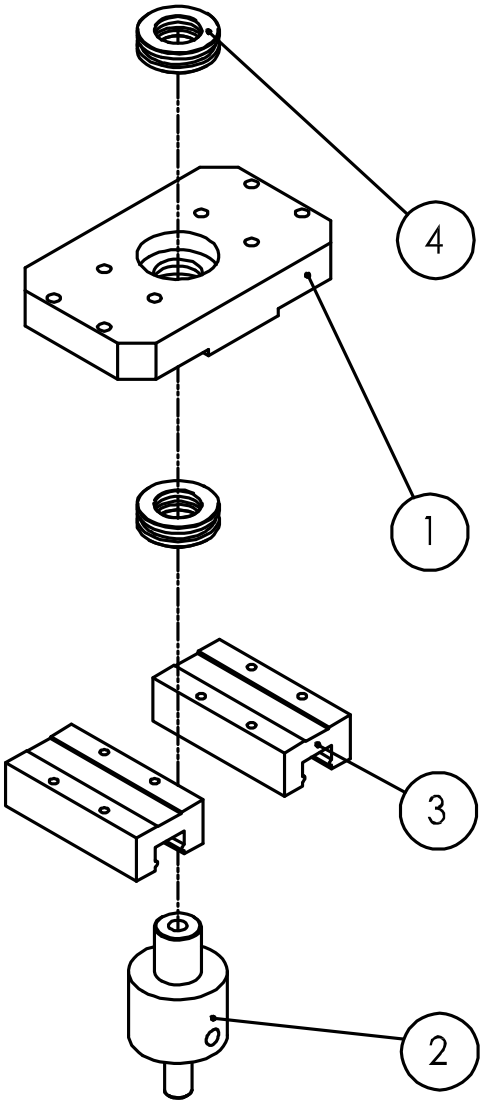

Opener Cart Unit				
Item	**Part Number**	**Description**	**Reference**	**Q'ty**
1	5031026	Seat	P02-032860A	1
2	5031027	Connect Shaft	P02-032540B	1
3	5031028	Sliding Block	P1104-140000400	2
4	5030999	Bearing	P1104-220000100	2

Opener Track Unit

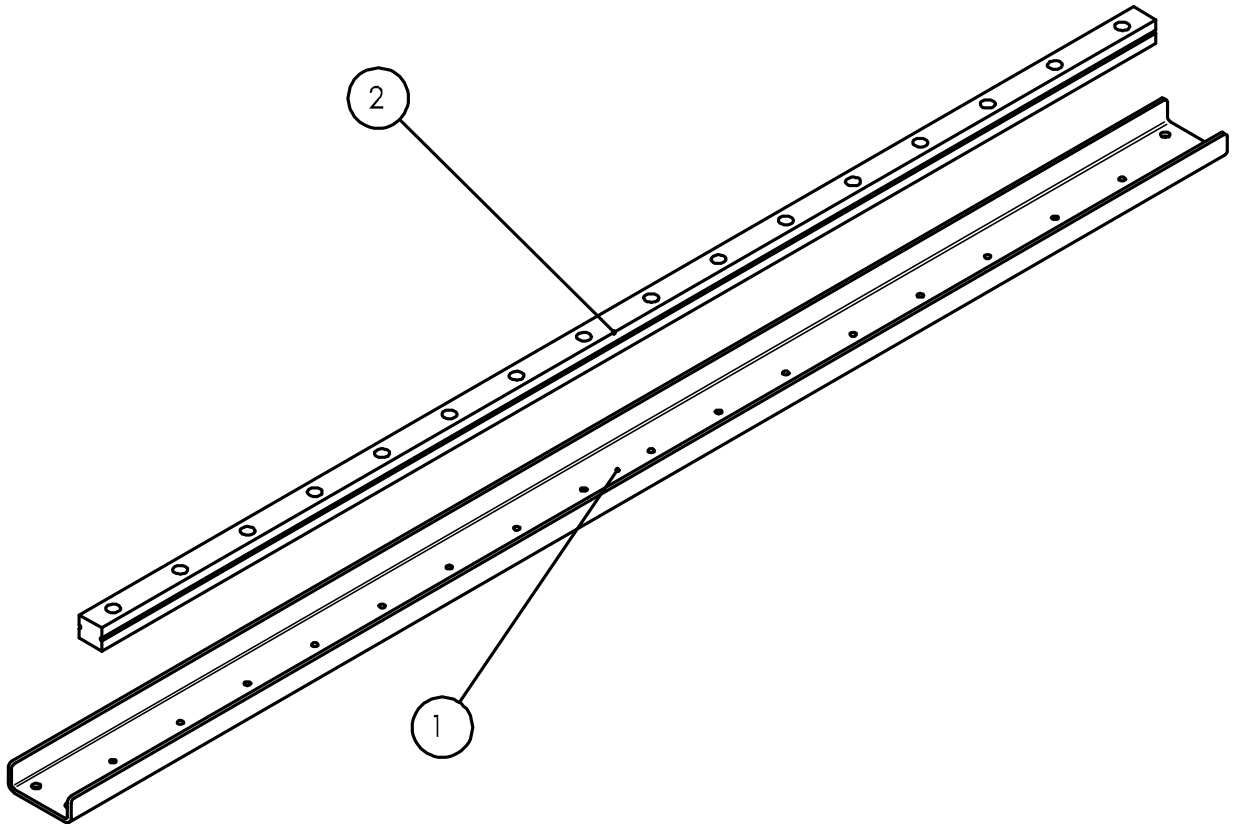

Opener Track Unit				
Item	**Part Number**	**Description**	**Reference**	**Q'ty**
1	5031030	Support Bracket	P01-0541800	1
2	5031031	Sliding Guide	P1104-140000700	1

Box Feeder Unit

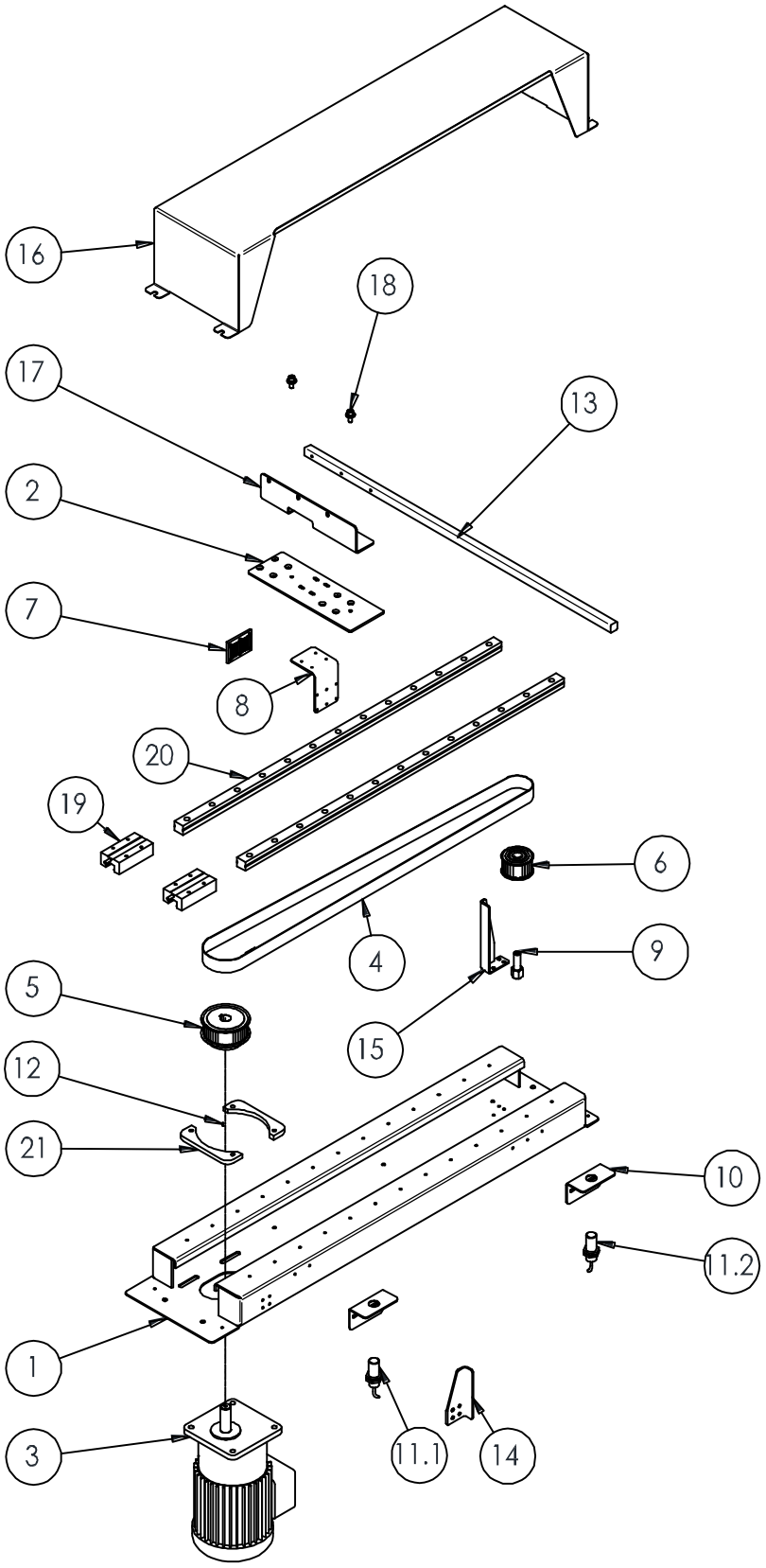

Box Feeder Unit				
Item	**Part Number**	**Description**	**Reference**	**Q'ty**
1	5031033	Motor Seat		1
2	5031034	Drive Seat		1
3	5031035	Feeder Motor	P0503-0018700	1
4	5031036	Belt	P0902-0008800	1
5	5031037	Driving Pulley	P02-0329900	1
6	5031038	Driven Pulley	P02-0329800	1
7	5031039	Belt Clamp	P02-0330000	1
8	5031040	Fix Plate	P01-0534600	1
9	5031041	Pully Shaft	P02-0326500	1
10	5031042	Sensor Plate	P01-053730A	2
11-1	5031043	Sensor - Start	P0319-C13731	1
11-2	5031044	Sensor - End	P0319-C13732	1
12	5031045	Key 5*5*20	P1108-010505020G	1
13	5031046	Box Feeder	P02-0393000	1
14	5031047	Stopper Front		1
15	5031048	Stopper Rear		1
16	5031049	Cover		1
17	5031050	Bracket		1
18	5030793	Screw M6*12L	P1101-0906012AN	2
19	5031051	Sliding Block	P1104-140000300	2
20	5031052	Sliding Guide	P1104-140000600	2
21	5031053	Adjust Plate		2

Stand Unit

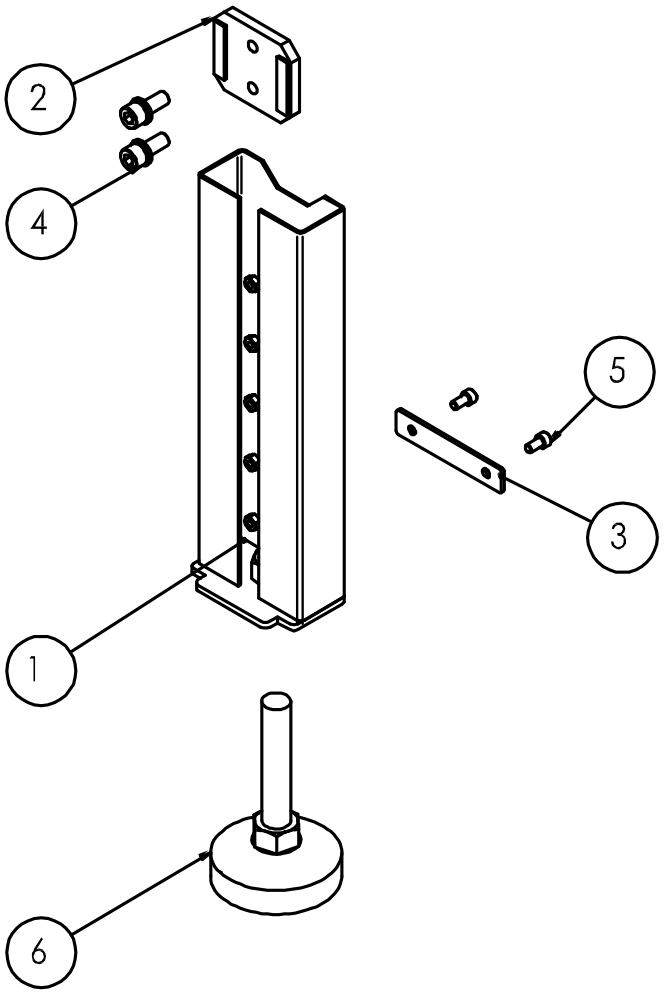

Stand Unit				
Item	**Part Number**	**Description**	**Reference**	**Q'ty**
1	5031055	Leg		1
2	5031056	Clamp		1
3	5031057	Fix Plate		1
4	5030849	Screw M10*25L	P1101-0910025AN	2
5	5031058	Screw M6*12L	P1101-0506012AN	2
6	5031059	Stand	P1111-0001500	1

Top Pusher Unit

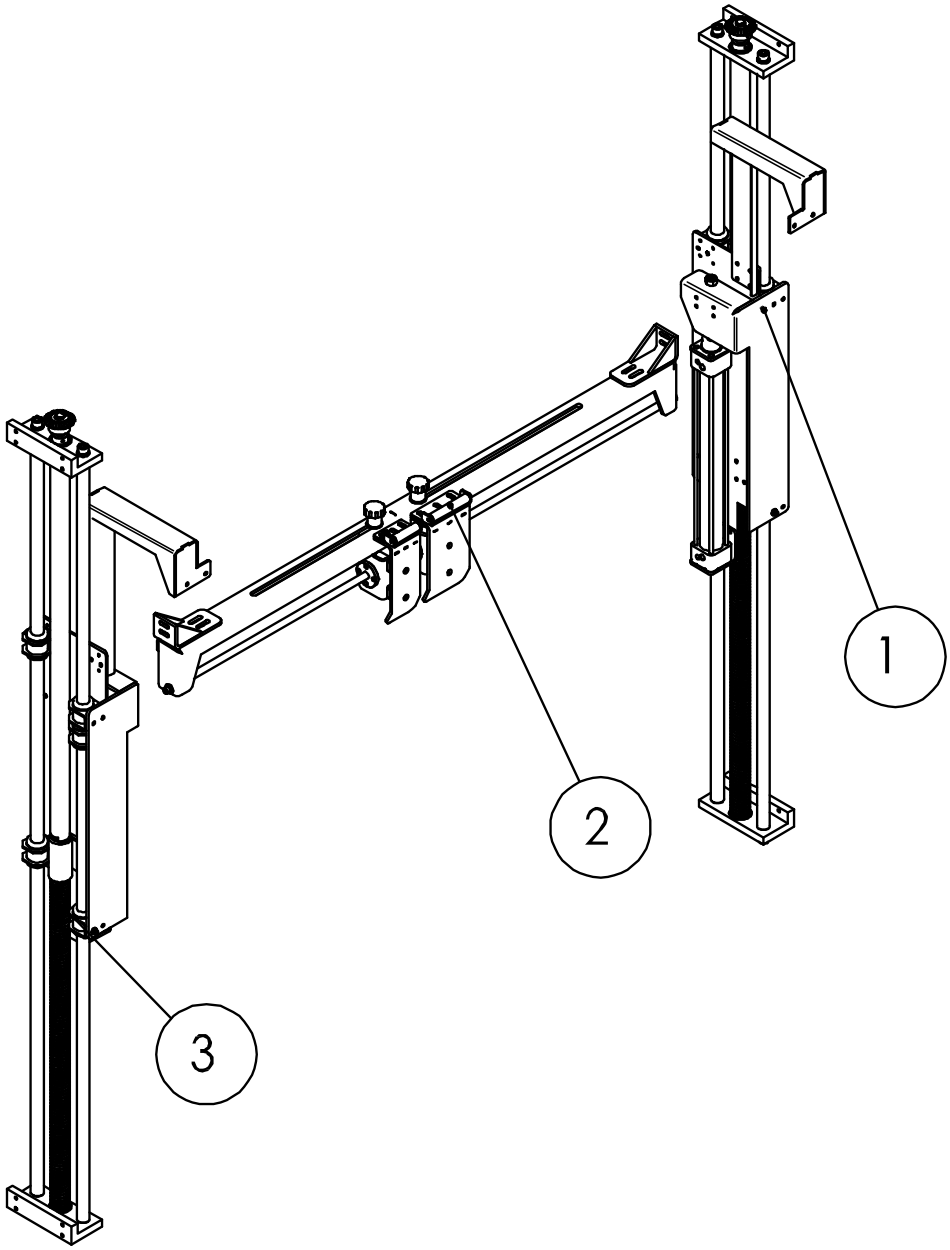

Top Pusher Unit				
Item	**Part Number**	**Description**	**Reference**	**Q'ty**
1	5031061	Right Guide Unit	***	1
2	5031062	Pusher Unit	***	1
3	5031063	Left Guide Unit	***	1

Right Guide Unit

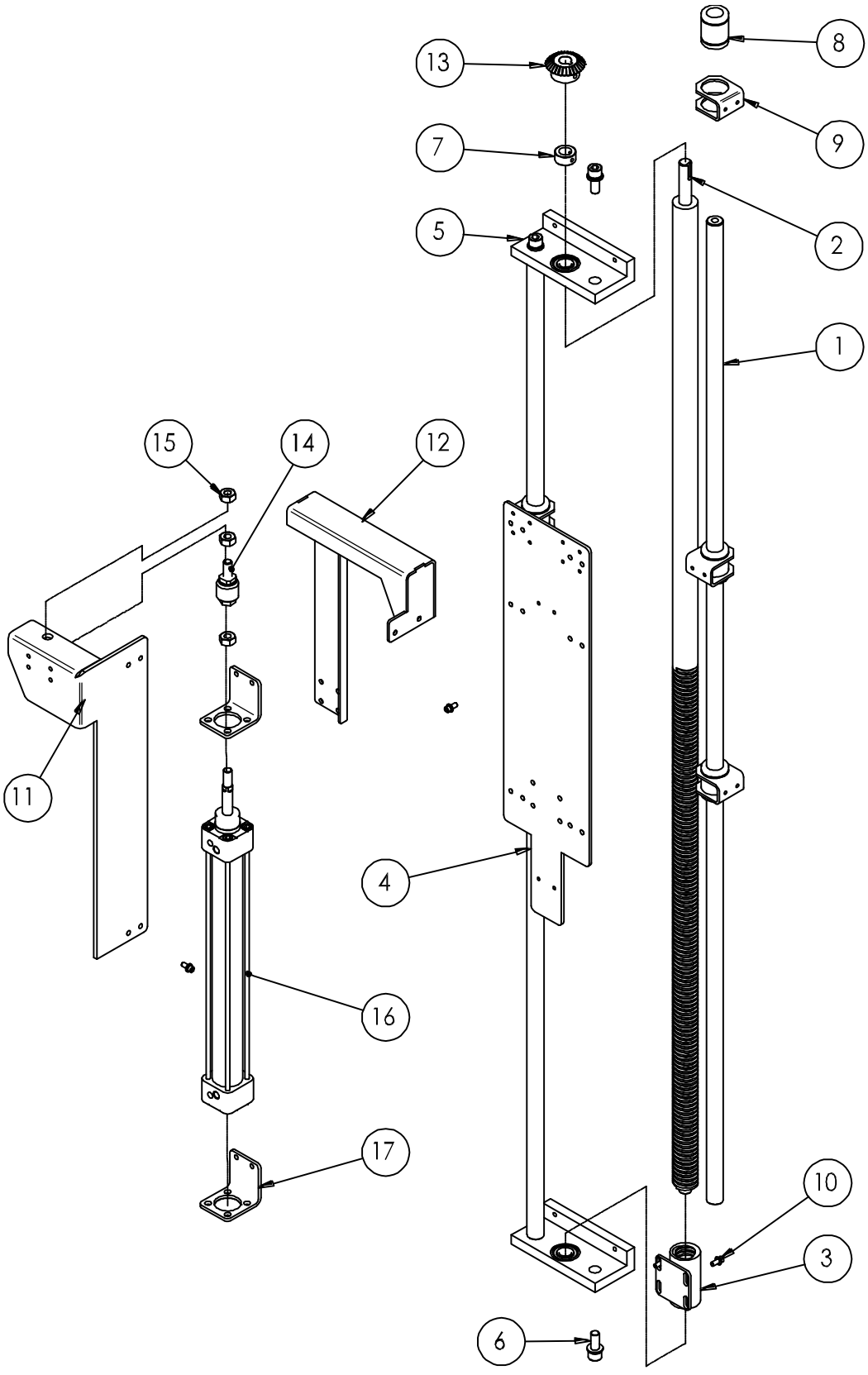

Right Guide Unit				
Item	**Part Number**	**Description**	**Reference**	**Q'ty**
1	5031065	Shaft	P02-0324400	2
2	5031066	Thread Rod	P02-032470A	1
3	5031067	Thread Rod Seat	P02-0328900	1
4	5031068	Cylinder Fix Plate		1
5.1	5031069	Seat	P02-0324800	2
5.2	5030971	Bearing	P1104-026202ZZ0	2
6	5030849	Screw M10*25L	P1101-0910025AN	3
7	5030906	Fix Ring	P02-0083500	1
8	5031070	Linear Bushing	P1104-01200	5
9	5031071	Bracket		5
10	5031021	Screw M5*12L	P1101-0905012AN	4
11	5031072	Support Bracket		1
12	5031073	Fix Plate		1
13	5030936	Bevel Gear	P0701-0003000	1
14	5031074	Connector	P0403-050000300	1
15	5031075	Nut M10	P1102-0110BZ	3
16	5031076	Top Pusher Cylinder - Right	P0319-C13704	1
17	5031077	Cylinder Bracket		2

Left Guide Unit

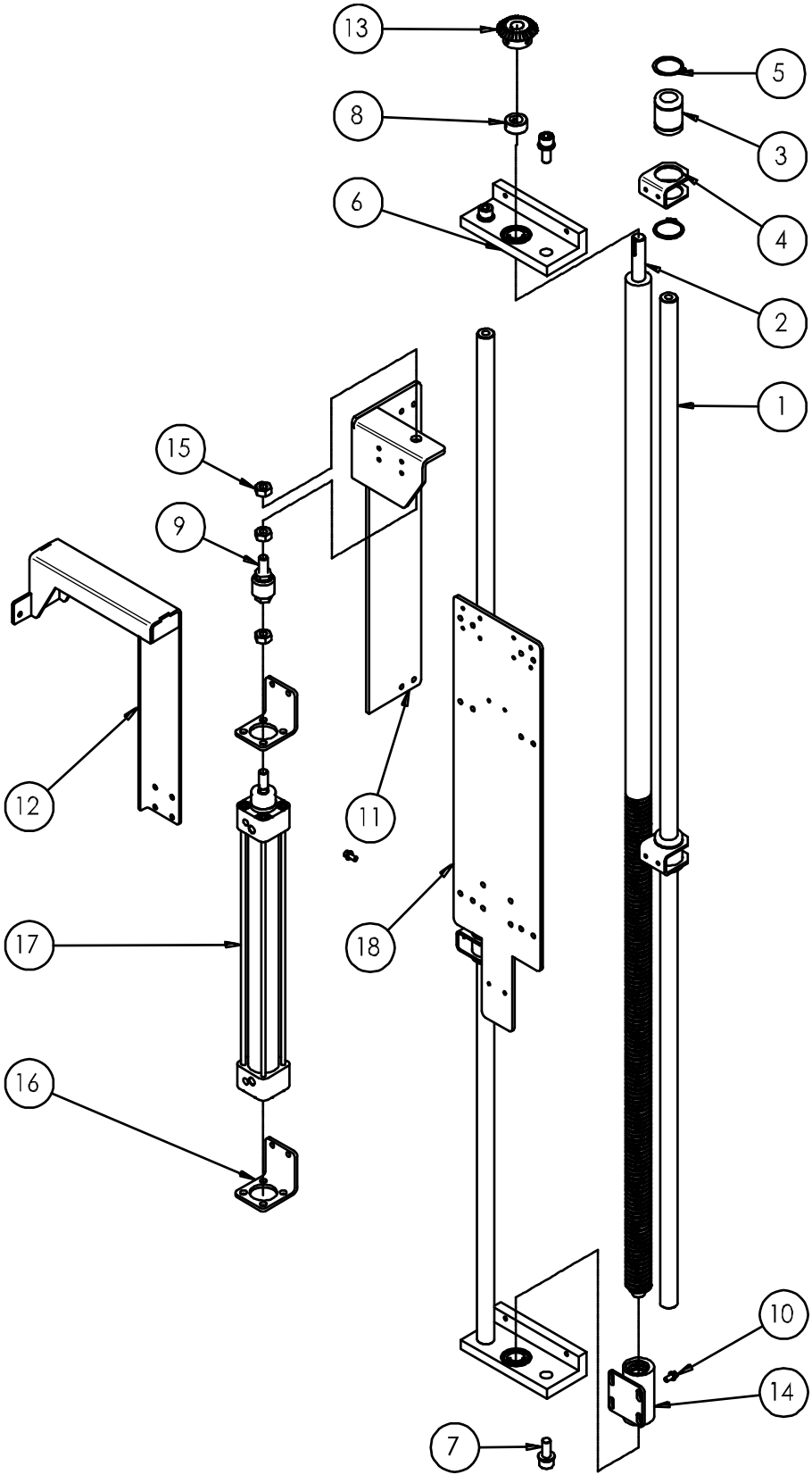

Left Guide Unit				
Item	**Part Number**	**Description**	**Reference**	**Q'ty**
1	5031065	Shaft	P02-0324400	2
2	5031079	Thread Rod	P02-032490A	1
3	5031070	Linear Bushing	P1104-01200	5
4	5031080	Bracket		5
5	5031081	C Clip	P1105-0132B	2
6.1	5031069	Seat	P02-0324800	2
6.2	5030971	Bearing	P1104-026202ZZ0	2
7	5030849	Screw M10*25L	P1101-0910025AN	3
8	5030906	Fix Ring	P02-0083500	1
9	5031074	Connector	P0403-050000300	1
10	5031021	Screw M5*12L	P1101-0905012AN	2
11	5031082	Support Bracket		1
12	5031083	Fix Plate		1
13	5030936	Bevel Gear	P0701-0003000	1
14	5031084	Thread Rod Seat	P02-0329000	1
15	5031075	Nut M10	P1102-0110BZ	3
16	5031085	Cylinder Bracket		2
17	5031086	Top Pusher Cylinder - Left	P0319-C13703	1
18	5031087	Cylinder Fix Plate		1

Pusher Unit

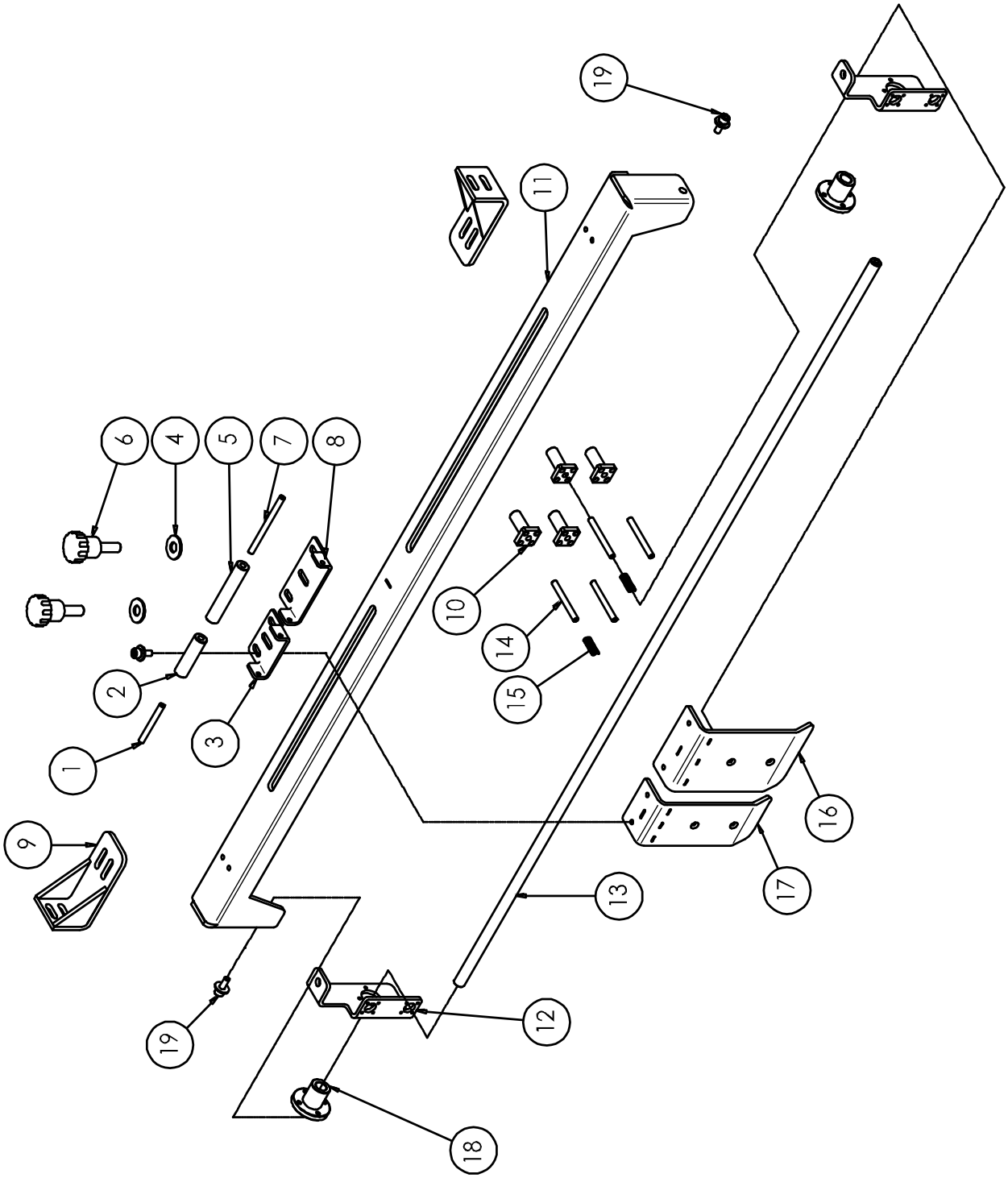

Pusher Unit				
Item	**Part Number**	**Description**	**Reference**	**Q'ty**
1	5031089	Roller Shaft - W	P02-0354600	1
2	5031090	Roller - W	P06-006800A	1
3	5031091	Holding Plate - W	P01-0566300	1
4	5031092	Washer	P1103-01102502Z	2
5	5031093	Roller - L	P06-0073500	1
6	5031094	Knob	P1113-0003800	2
7	5031095	Roller Shaft - L	P02-0354500	1
8	5031096	Holding Plate - L	P01-0566400	1
9	5031097	Bracket		2
10	5031098	Linear Bearing	P1104-01060	4
11	5031099	Push Bar		1
12	5031100	Fix Plate		2
13	5031101	Shaft	P02-032450A	1
14	5031102	Shaft	P02-0324600	4
15	5031103	Spring	P1201-0003300	2
16	5031104	Push Plate - L	P01-052970A	1
17	5031105	Push Plate - W	P01-052940A	1
18	5031106	Linear Bushing	P1104-0912010	2
19	5030793	Screw M6*12L	P1101-0906012AN	3

Top Adjust Unit

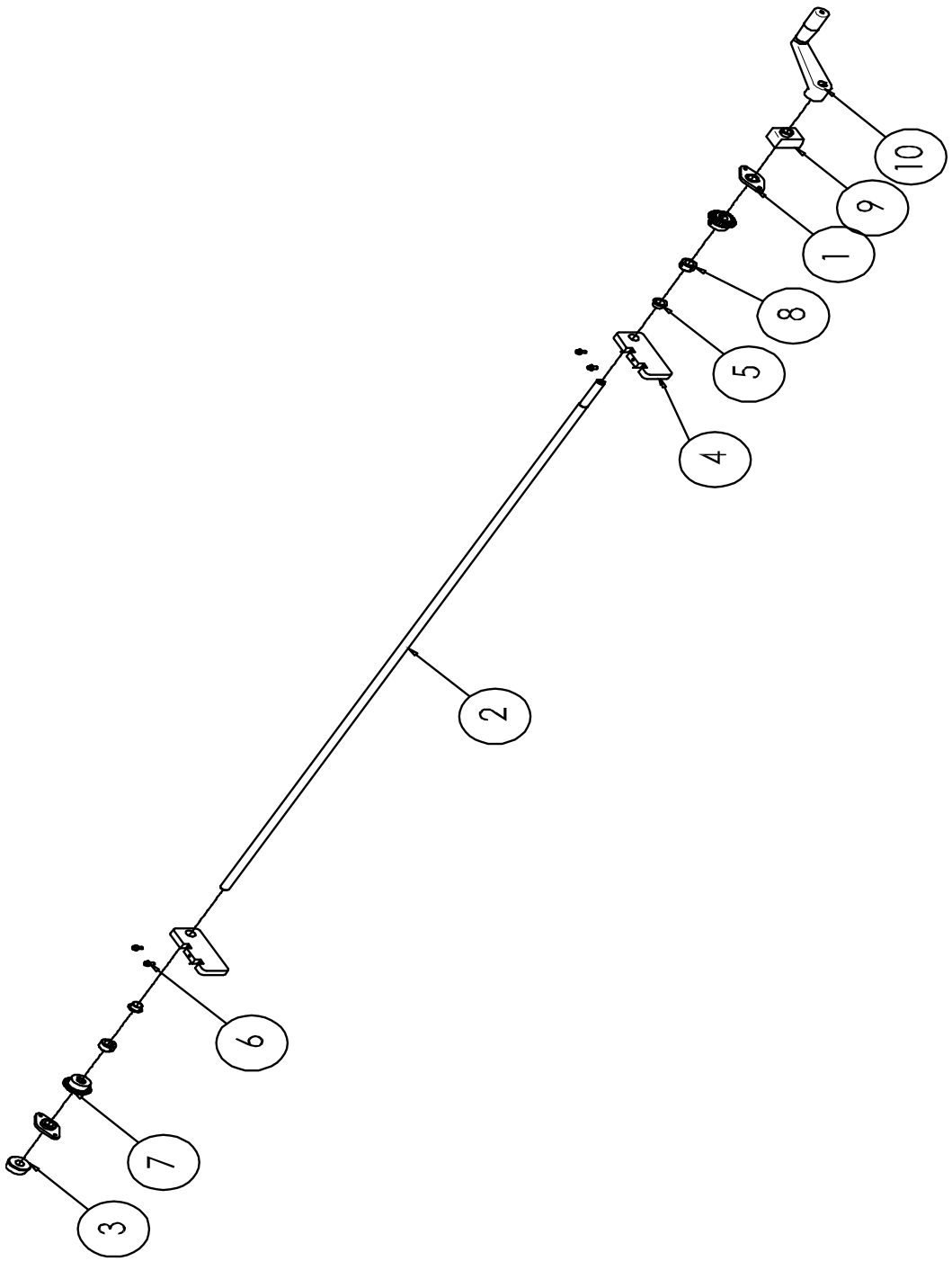

Top Adjust Unit				
Item	**Part Number**	**Description**	**Reference**	**Q'ty**
1	5030980	Bushing Seat	P01-0135000	2
2	5031108	Shaft	P02-0325000	1
3	5031109	Cover	P06-0022600	1
4	5031110	Seat	P02-0326300	2
5	5030976	Bushing	P1104-0315100	2
6	5031021	Screw M5*12L	P1101-0905012AN	4
7	5030978	Bevel Gear	P0701-0004400	2
8	5030906	Fix Ring	P02-0083500	2
9	5031111	Indicator	P1130-0000200	1
10	5030913	Handle	P1112-0000300	1

Opener Cart Guide Unit

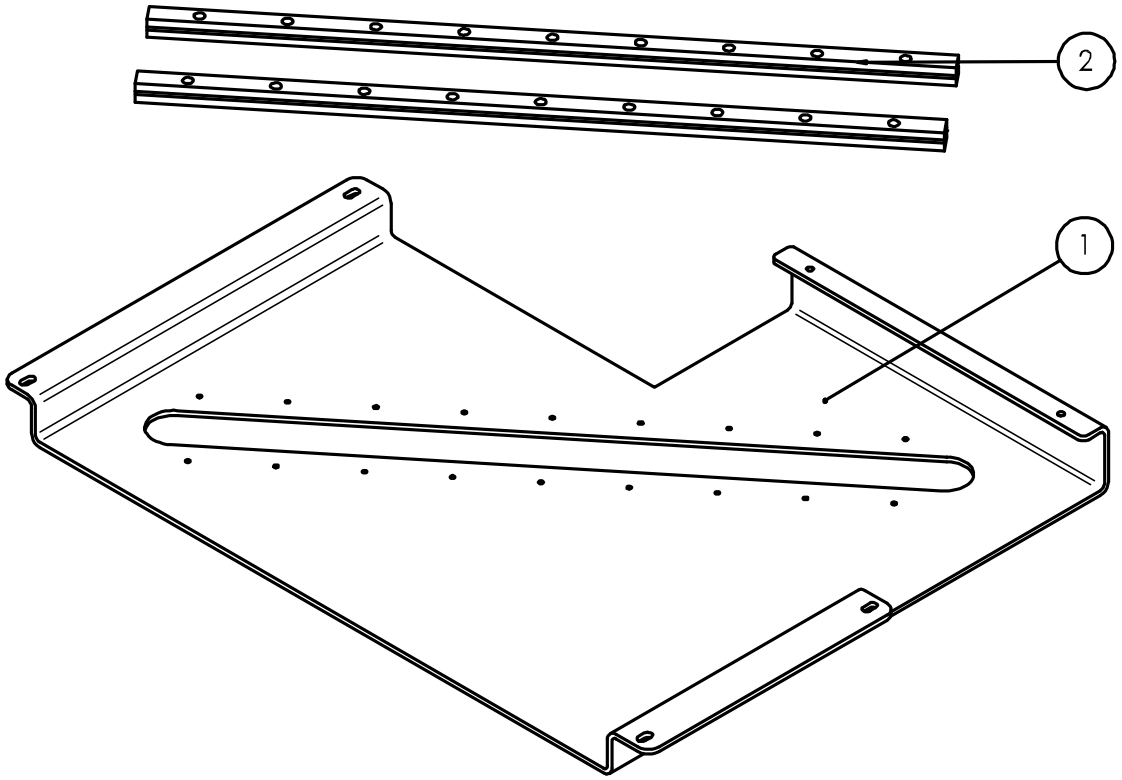

Opener Cart Guide Unit				
Item	**Part Number**	**Description**	**Reference**	**Q'ty**
1	5031113	Seat Plate		1
2	5031114	Linear Guide	P1104-140001200	2

Exit Guard Unit

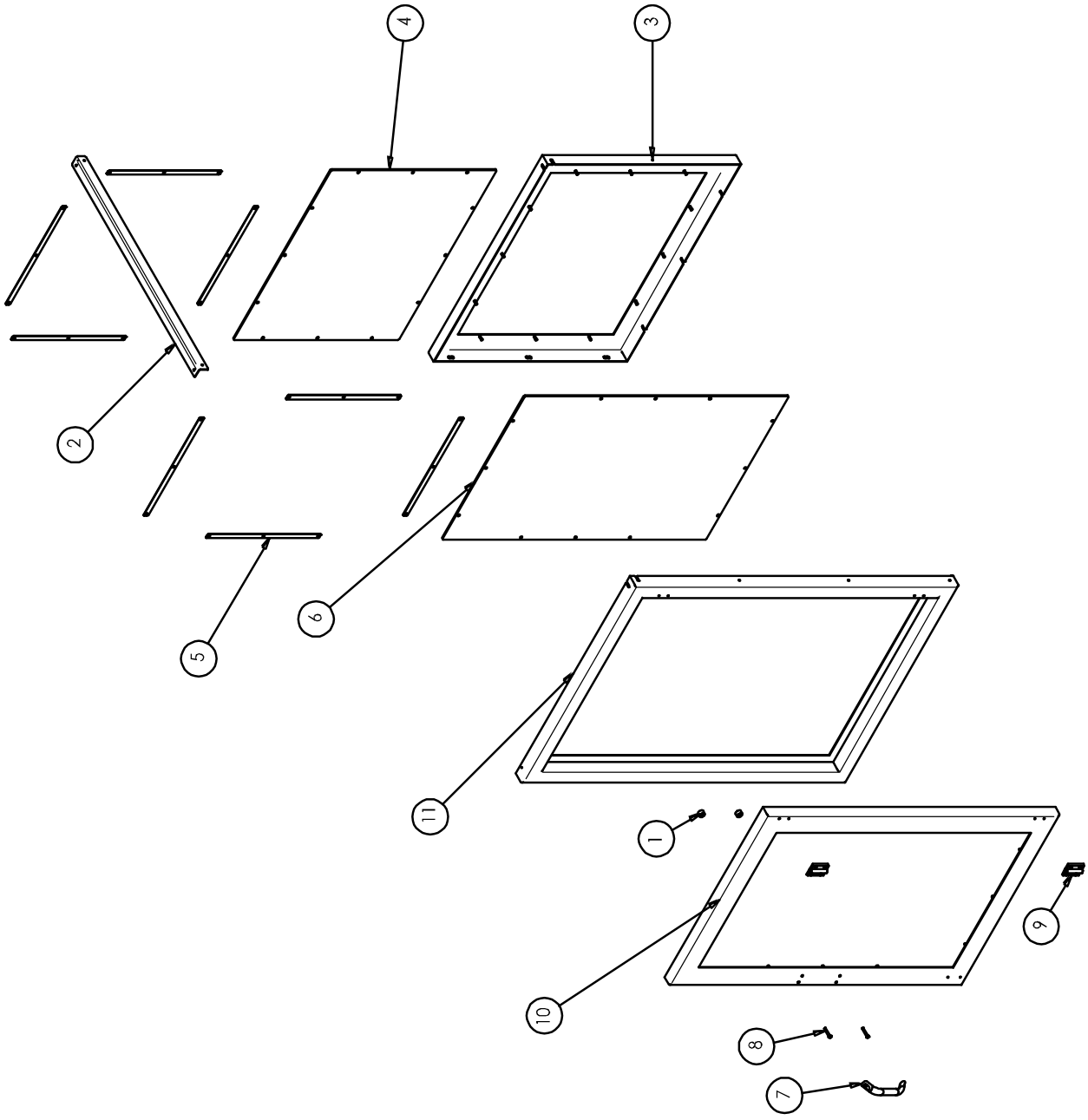

Exit Guard Unit				
Item	**Part Number**	**Description**	**Reference**	**Q'ty**
1	5030819	Magnetic	P1106-020000100	2
2	5031116	Door Bracket		1
3	5031117	Door Frame - Left		1
4	5031118	Door - Left	P06-0061500	1
5	5031119	Fix Plate	P01-0080500	8
6	5031120	Door - Right	P06-0061700	1
7	5030817	Handle	P1112-0000700	1
8	5031121	Screw M5*30l	P1101-0305030AS	2
9	5030818	Hinge	P1110-020000500	4
10	5031122	Door Frame - Right		1
11	5031123	Frame		1

Adjust Connect Unit

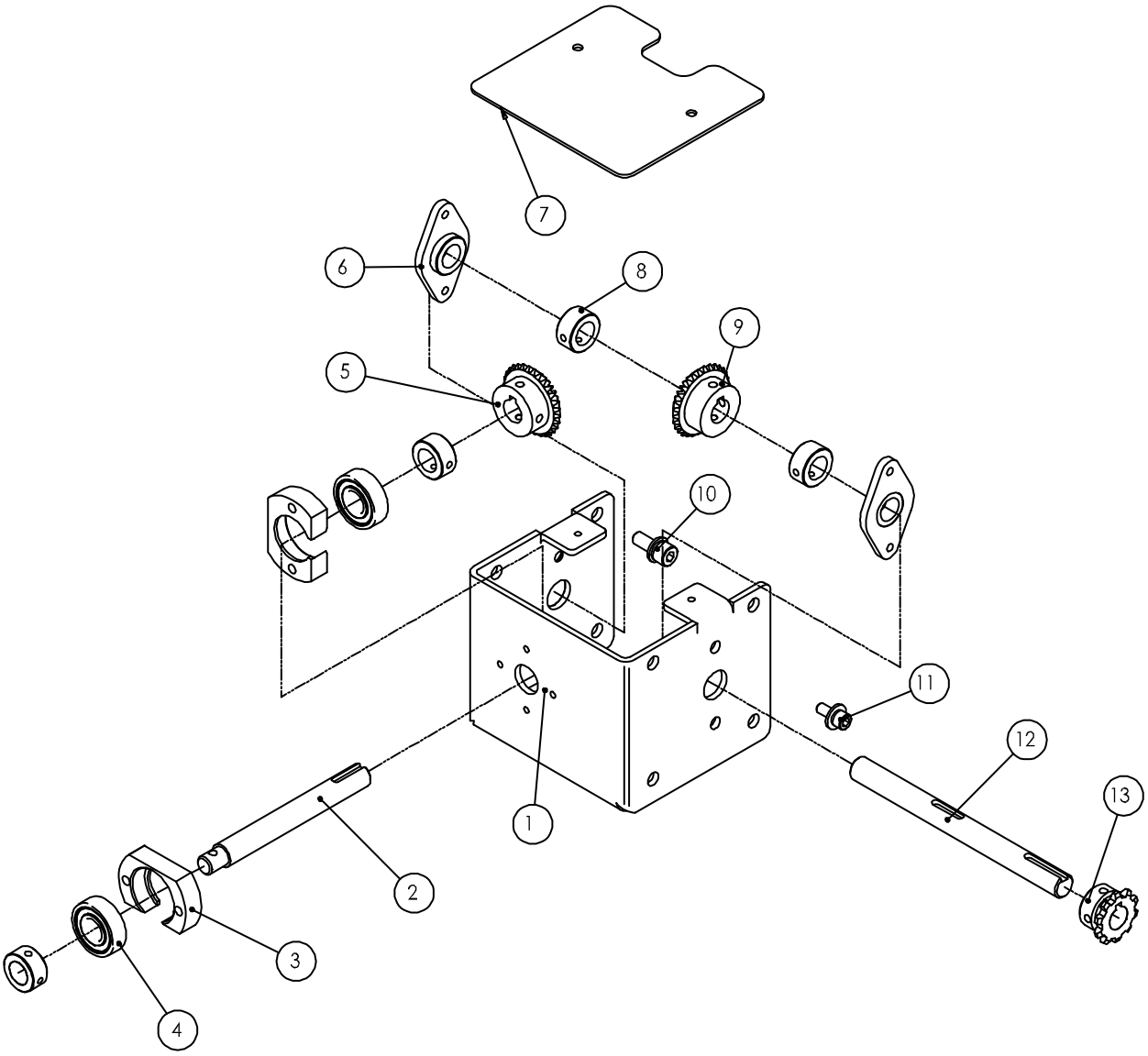

Adjust Connect Unit				
Item	**Part Number**	**Description**	**Reference**	**Q'ty**
1	5031125	Seat		1
2	5031126	Shaft	P02-0394000	1
3	5031127	Bearing Seat	P06-0022500	2
4	5030971	Bearing	P1104-026202ZZ0	2
5	5030936	Bevel Gear	P0701-0003000	1
6	5030980	Bushing Seat	P01-0135000	2
7	5031128	Cover		1
8	5030906	Fix Ring	P02-0083500	4
9	5030978	Bevel Gear	P0701-0004400	1
10	5030869	Screw M8*20l	P1101-0908020AN	1
11	5030793	Screw M6*12l	P1101-0906012AN	1
12	5031129	Sprocket Shaft	P02-0351400	1
13	5031130	Sprocket	P0702-000460A	1

Electric Box Unit

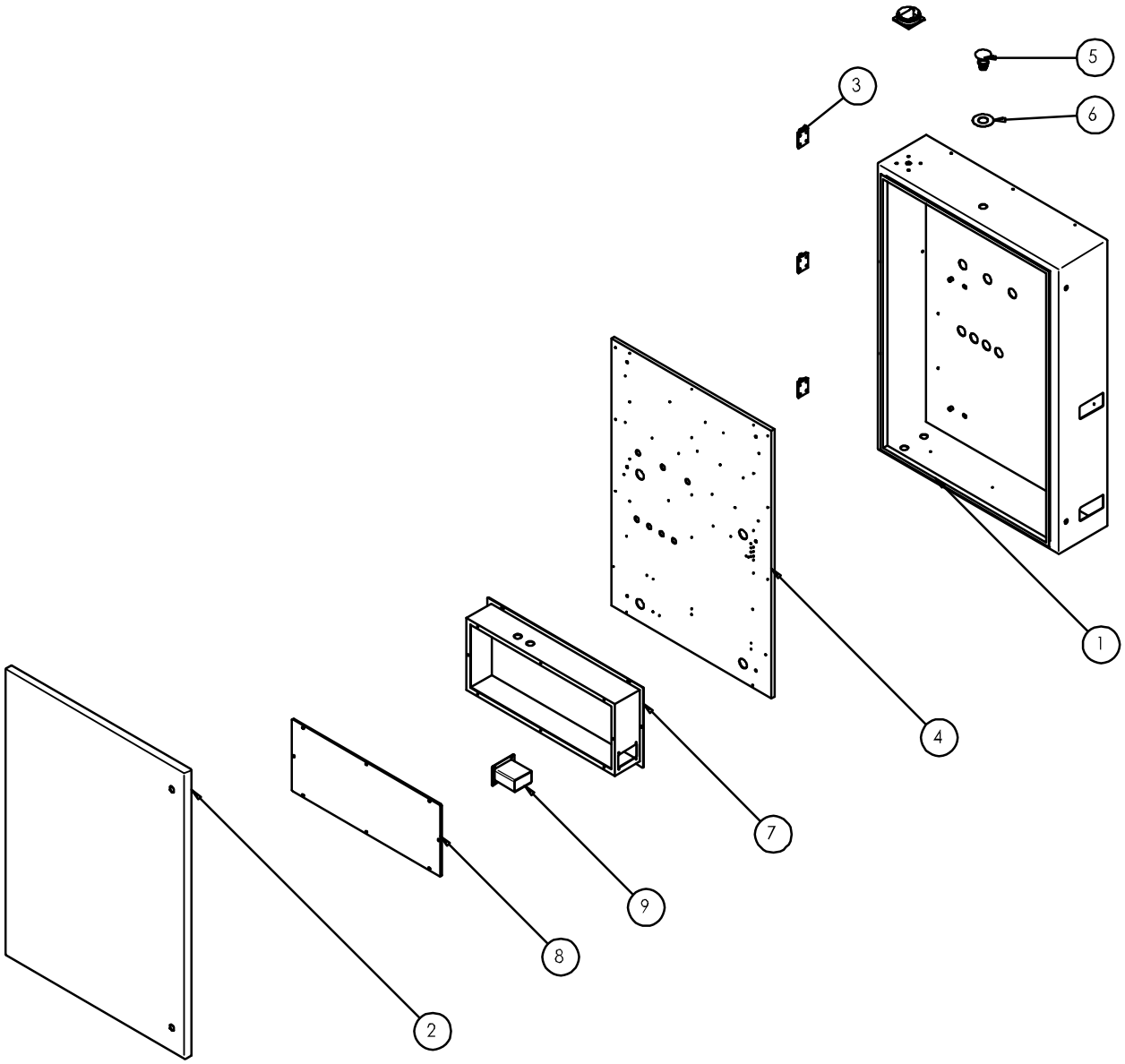

Electric Box Unit				
Item	**Part Number**	**Description**	**Reference**	**Q'ty**
1	5031132	Electric Box		1
2	5031133	Electric Door		1
3	5030818	Hinge	P1110-020000500	6
4	5031134	Electric Fix Plate		1
5	5031135	Emergency Stop Button	P0313-010006300	1
6	5031136	Emergency Stop Sticker	P1001-0001400	1
7	5031137	Pneumatic Box		1
8	5031138	Cover	P06-006680A	1
9	5031139	Cable Fixer		1

Opener Drive Unit

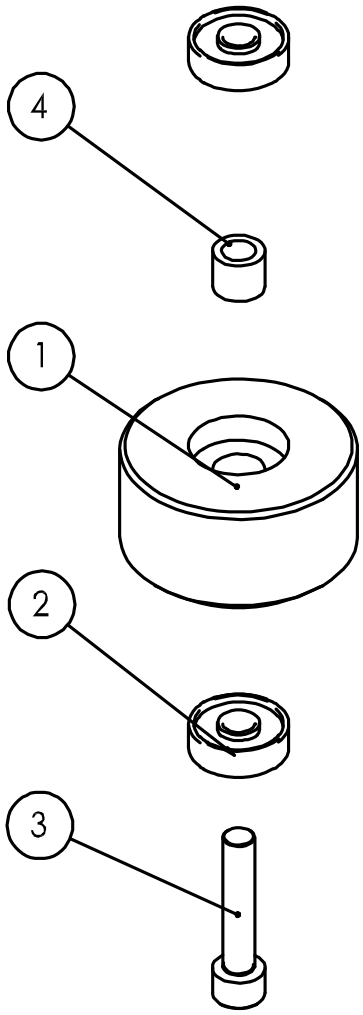

Opener Drive Unit				
Item	**Part Number**	**Description**	**Reference**	**Q'ty**
1	5031141	Drive Roller	P06-006180C	1
2	5031142	Bearing	P1104-020626ZZ0	2
3	5031143	Screw M6*30L	P1101-0506030AN	1
4	5031144	Spacer	P02-0392700	1

Magazine Unit

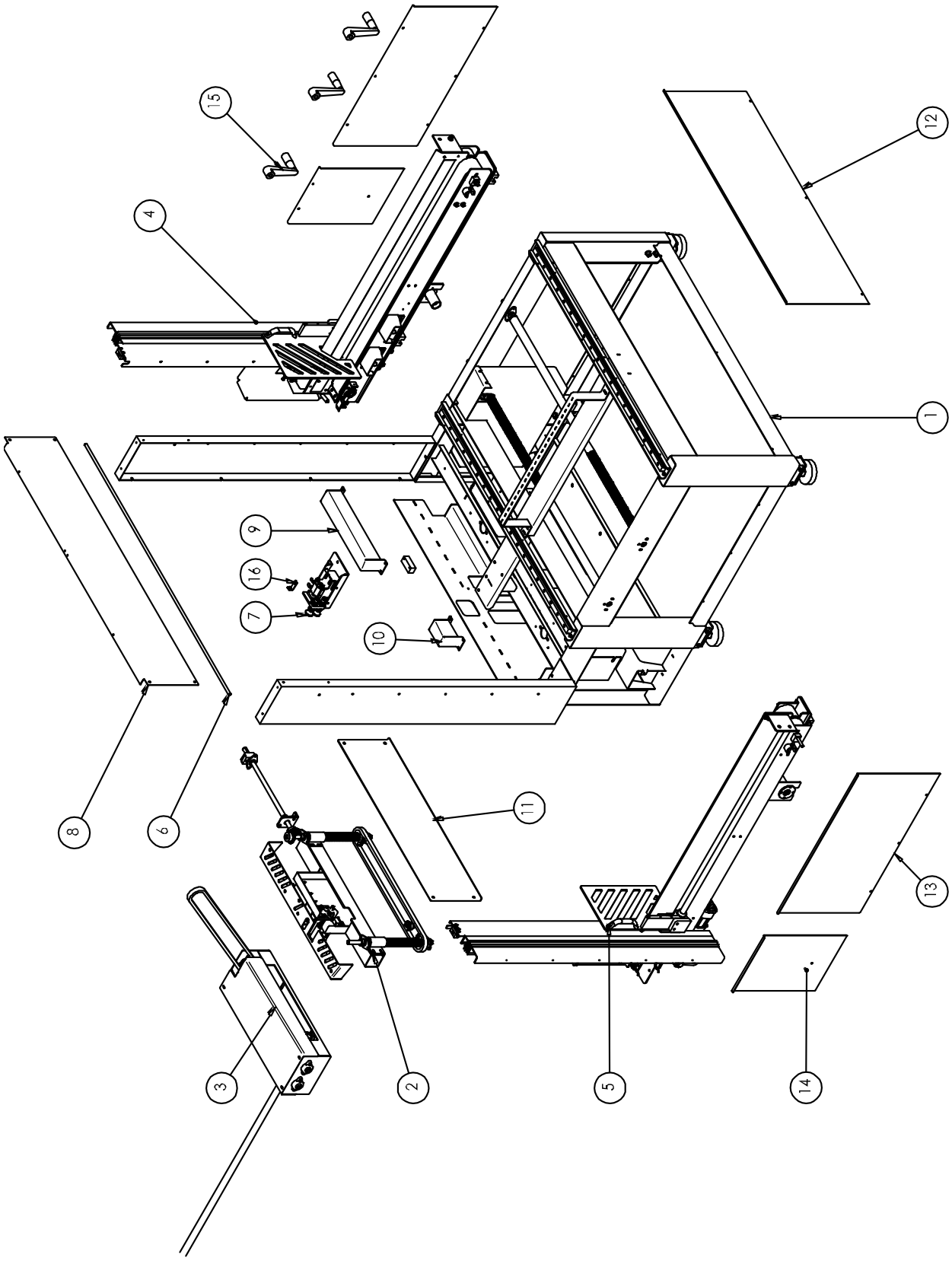

Magazine Unit				
Item	**Part Number**	**Description**	**Reference**	**Q'ty**
1	5031146	Magazine Base Unit	***	1
2	5031147	Base Plane Unit	***	1
3	5031213	Adjust Connect Unit	***	1
4	5031148	Magazine Belt-Right Unit	***	1
5	5031149	Magazine Belt-Left Unit	***	1
6	5031150	Shaft	P02-0354300	1
7	5031151	Separate Suction Unit	***	1
8	5031152	Cover		1
9	5031153	Cover		1
10	5031154	Cover		1
11	5031155	Cover		1
12	5031156	Cover		1
13	5031157	Cover		2
14	5031158	Cover		2
15	5030913	Handle	P1112-0000300	3
16	5031159	Fixer		1
17	5031146	Magazine Base Unit	***	1
18	5031147	Base Plane Unit	***	1

Magazine Base Unit

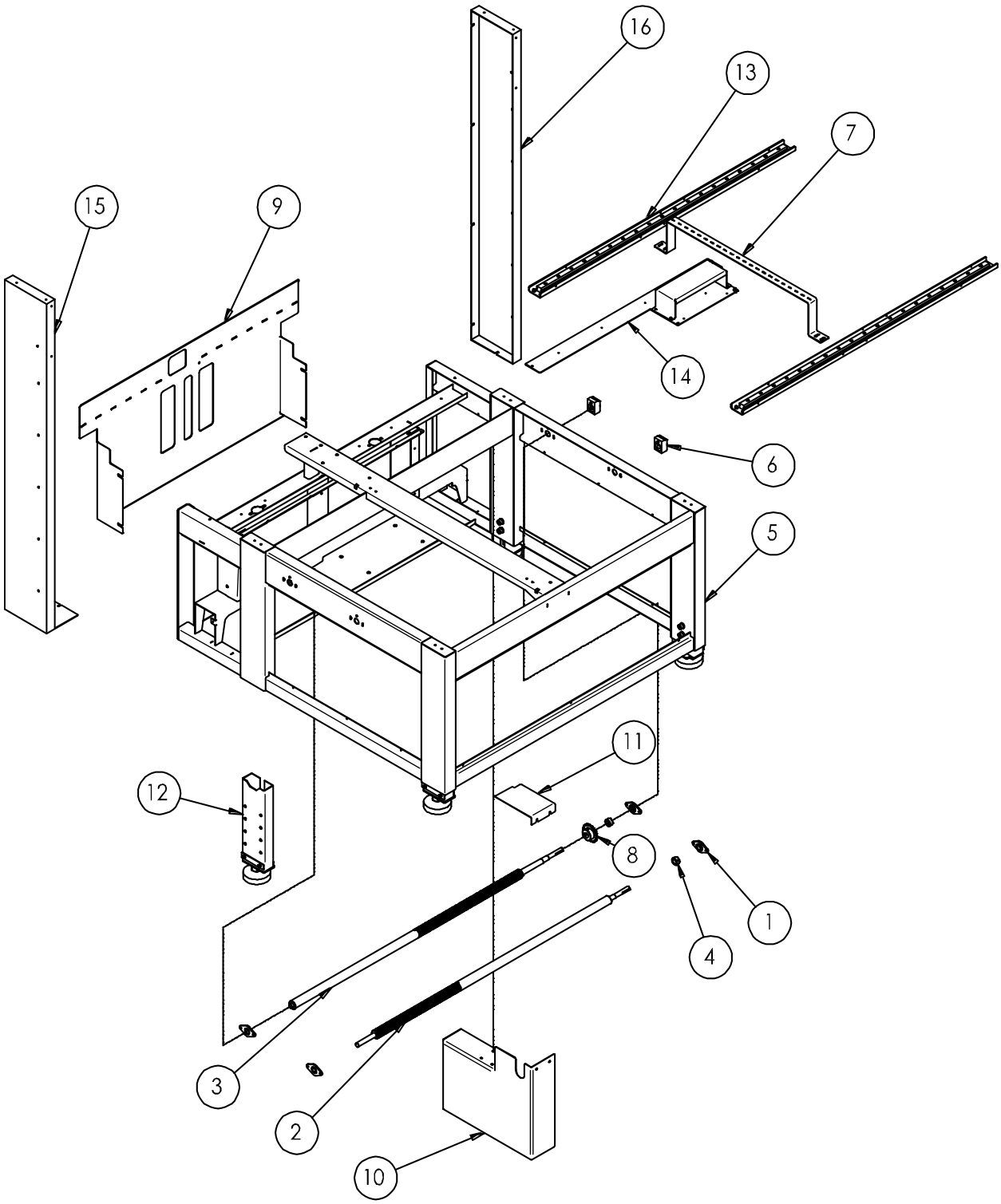

Magazine Base Unit				
Item	**Part Number**	**Description**	**Reference**	**Q'ty**
1	5031161	Bush Seat	P01-0135000	4
2	5031162	Thread Rod - Left	P02-032220A	1
3	5031163	Thread Rod -Right	P02-0322400	1
4	5030906	Fix Ring	P02-0083500	2
5	5031164	Frame		1
6	5030912	Indicator	P1130-0000100	2
7	5031165	Centering Plate		1
8	5030905	Sprocket	P0702-0010500	1
9	5031166	Base Plate		1
10	5031167	Cover		1
11	5031168	Cover		1
12	5031054	Stand Unit	***	4
13	5031169	Magazine Guide Unit	***	2
14	5031170	Cable Fixer Unit	***	1
15	5031171	Cover Left		1
16	5031172	Cover Right		1

Magazine Guide Unit

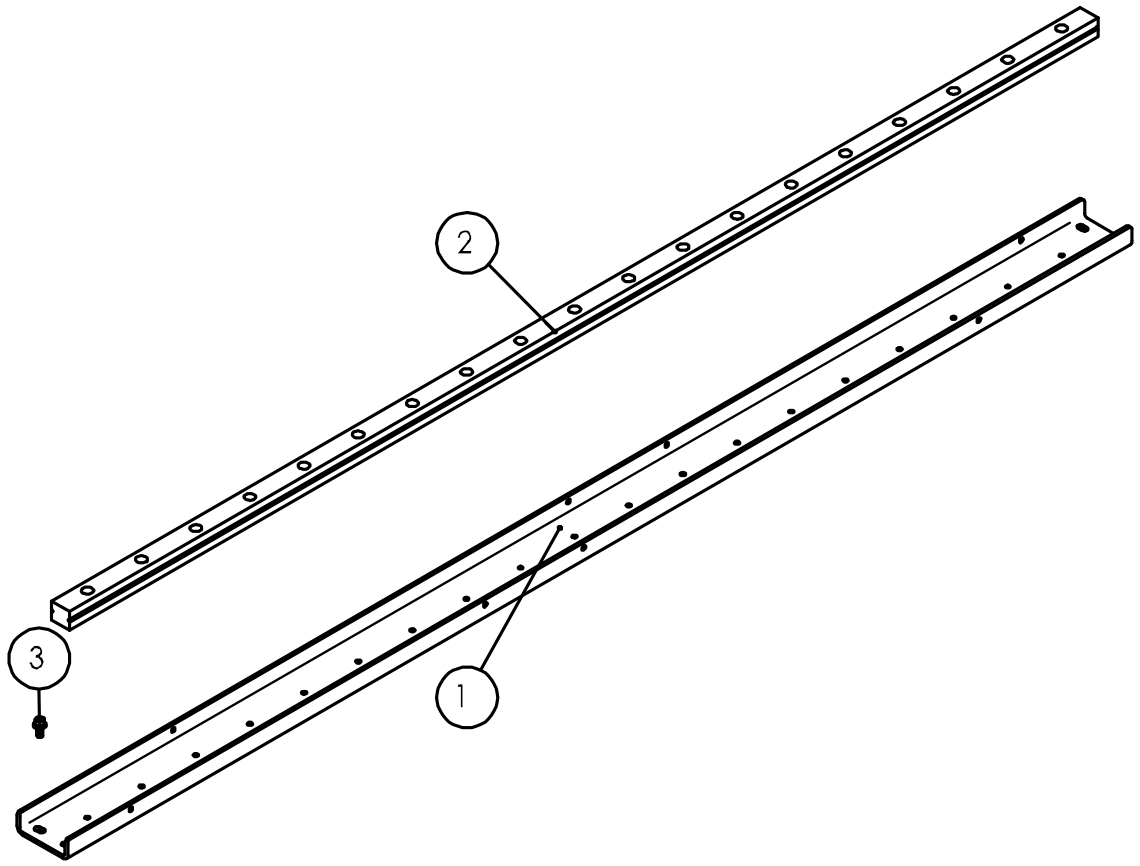

Magazine Guide Unit				
Item	**Part Number**	**Description**	**Reference**	**Q'ty**
1	5031174	Support		1
2	5031175	Linear Guide	P1104-140001100	1
3	5031021	Screw M5*12L	P1101-0905012AN	1

Cable Fixer Unit

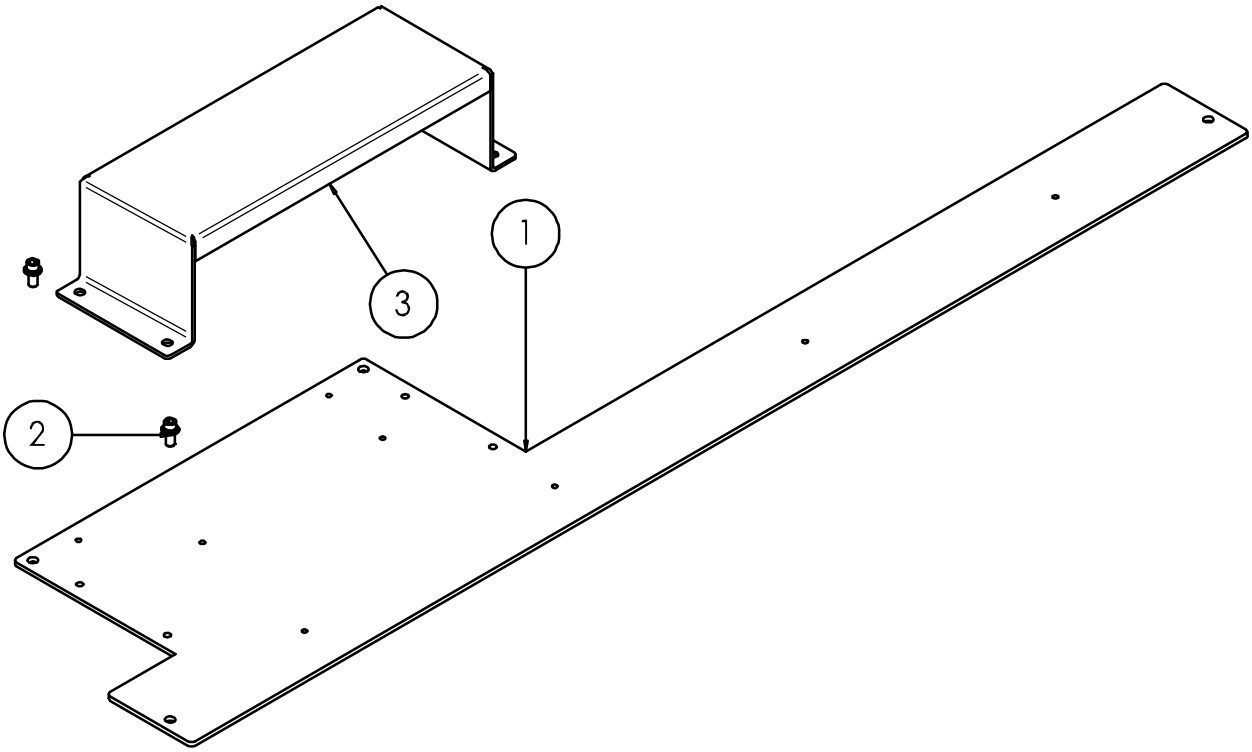

Cable Fixer Unit				
Item	**Part Number**	**Description**	**Reference**	**Q'ty**
1	5031177	Fix Plate		1
2	5031021	Screw M5*12L	P1101-0905012AN	2
3	5031178	Cover		1

Base Plane Unit

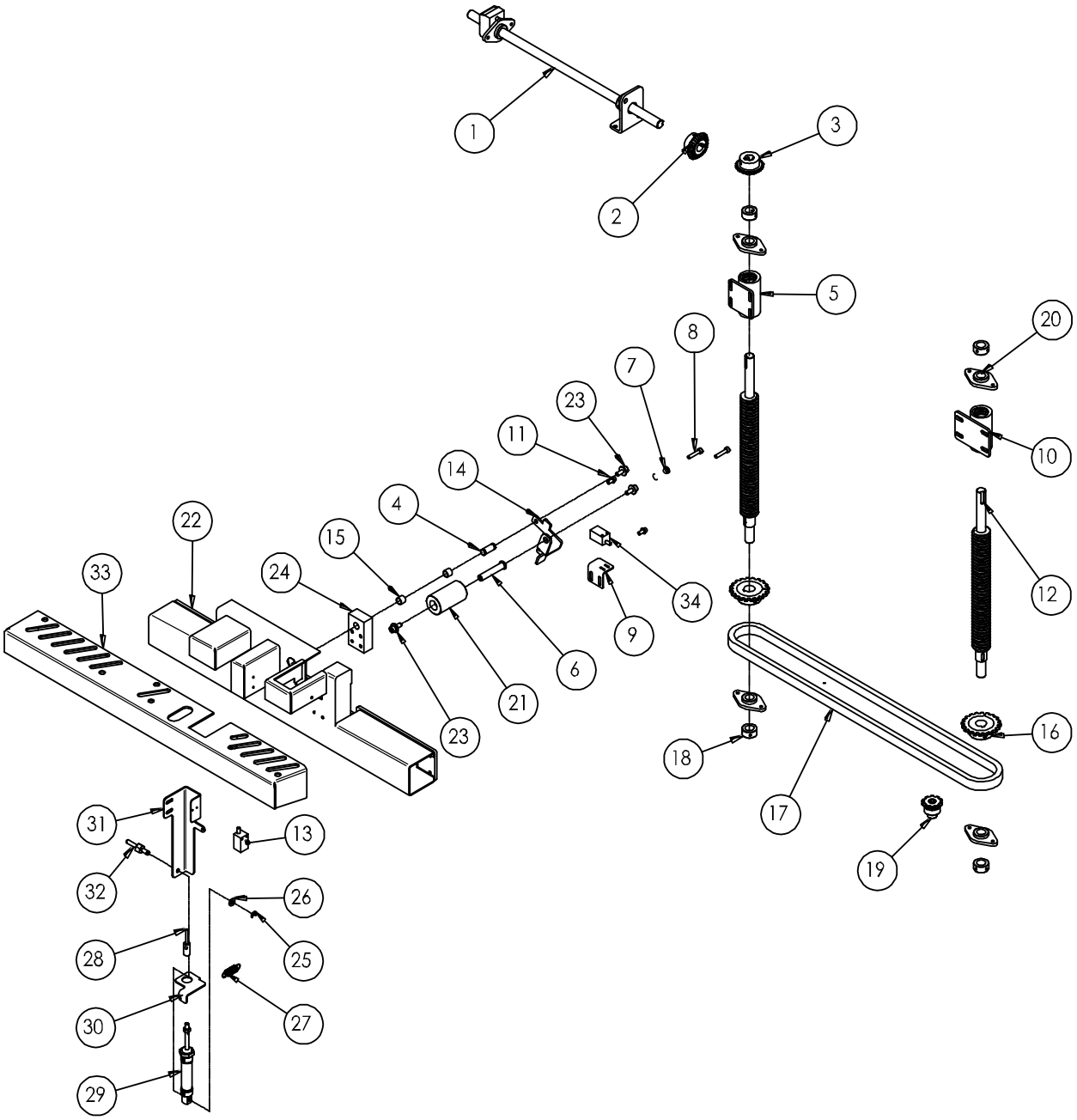

Base Plane Unit				
Item	**Part Number**	**Description**	**Reference**	**Q'ty**
1	5031177	Extension Shaft Unit	***	1
2	5031021	Bevel Gear	P0701-0003000	1

Base Plane Unit				
Item	**Part Number**	**Description**	**Reference**	**Q'ty**
3	5031178	Bevel Gear	P0701-0004400	1
4	5031179	Shaft	P02-0328100	1
5	5031180	Seat	P02-0328900	1
6	5030936	Shaft	P02-0322700	1
7	5030978	Spring	P1202-0004700	1
8	5031181	Screw M5*25L	P1101-0505025AN	2
9	5031182	Sensor Plate	P01-0535400	1
10	5031183	Seat	P02-0392800	1
11	5031184	Screw M5*12L	P1101-0905012AN	2
12	5031185	Lift Thread Rod	P02-032520A	2
13	5031186	Separate Cylinder	P0319-C13719	1
14	5031187	Shaft Bracket		1
15	5031021	Bushing	P1104-081012100	2
16	5031188	Sprocket	P0702-0010500	2
17	5031189	Chain	P0702-0011700	1
18	5031190	Fix Ring	P02-0083500	4
19	5030922	Idle Sprocket Unit	***	1
20	5030905	Bush Seat	P01-0135000	4
21	5031191	Sensor Roller	P06-0062100	1
22	5030906	Stopper		1
23	5031192	Screw M6*12L	P1101-0906012AN	3
24	5031161	Block	P02-0329200	1
25	5031193	E Clip	P1105-0305B	1
26	5031194	Washer 6	P1103-010612N	1
27	5030793	Spring	P1202-0002400	1
28	5031195	Connect Shaft	P02-0322900	1
29	5031196	Cylinder	P0402-0001600	1
30	5031197	Cylinder Fix Plate		1
31	5031198	Cylinder Bracket		1
32	5031199	Connection	P02-0392900	1
33	5031200	Base Plane		1
34	5031201	Sensor	P0319-C13712	1

Extension Shaft Unit

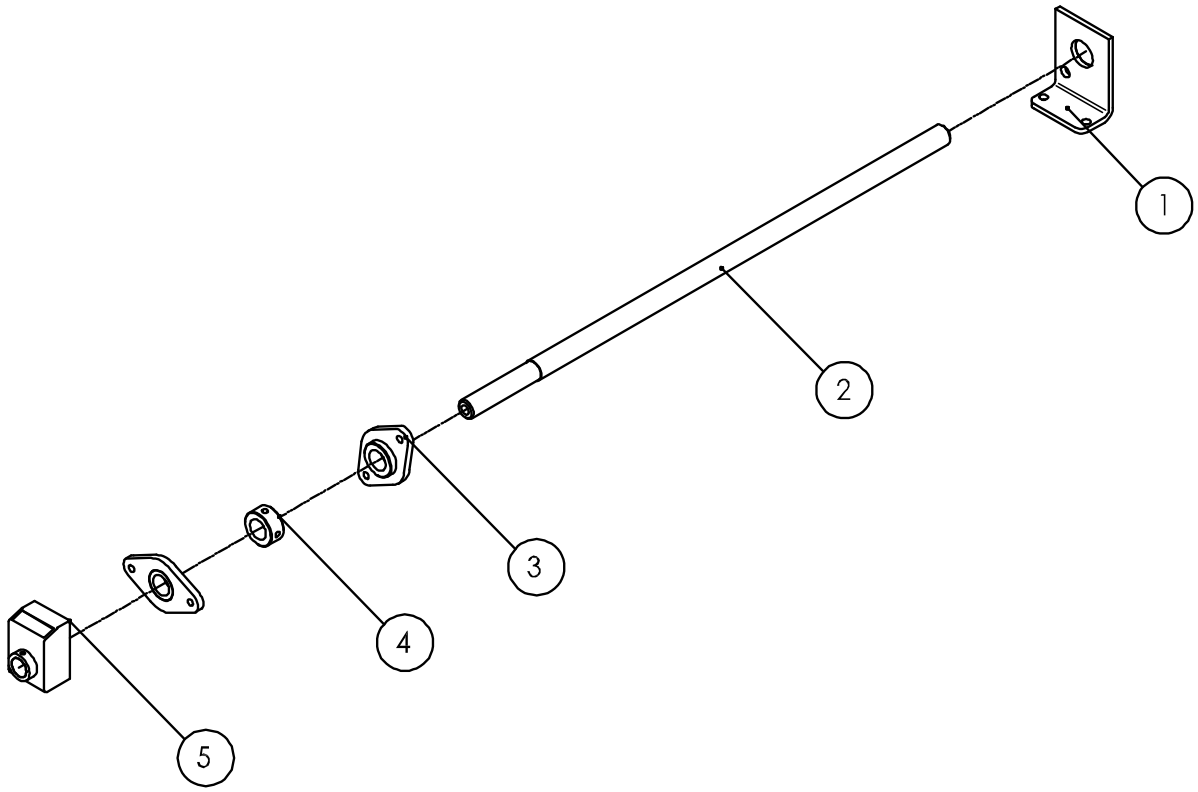

Extension Shaft Unit				
Item	**Part Number**	**Description**	**Reference**	**Q'ty**
1	5031207	Bracket		1
2	5031208	Extension Shaft	P02-0328700	1
3	5031209	Bushing	P01-0135000	2
4	5030906	Fix Ring	P02-0083500	1
5	5030912	Indicator	P1130-0000100	1

Idle Sprocket Unit

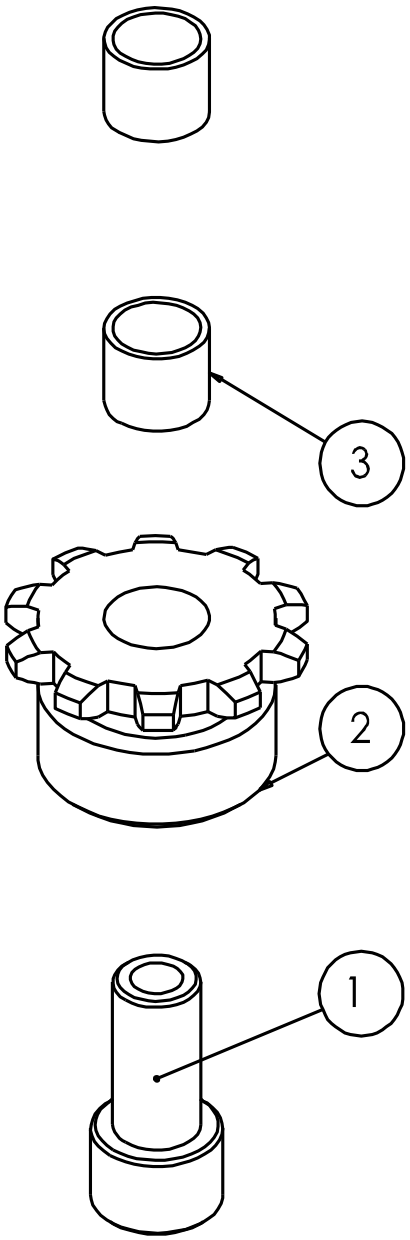

Idle Sprocket Unit				
Item	**Part Number**	**Description**	**Reference**	**Q'ty**
1	5031211	Sprocket Fix	P02-032530A	1
2	5031212	Sprocket	P0702-0004700	1
3	5030922	Bushing	P1104-081012100	2

Adjust Connect Unit

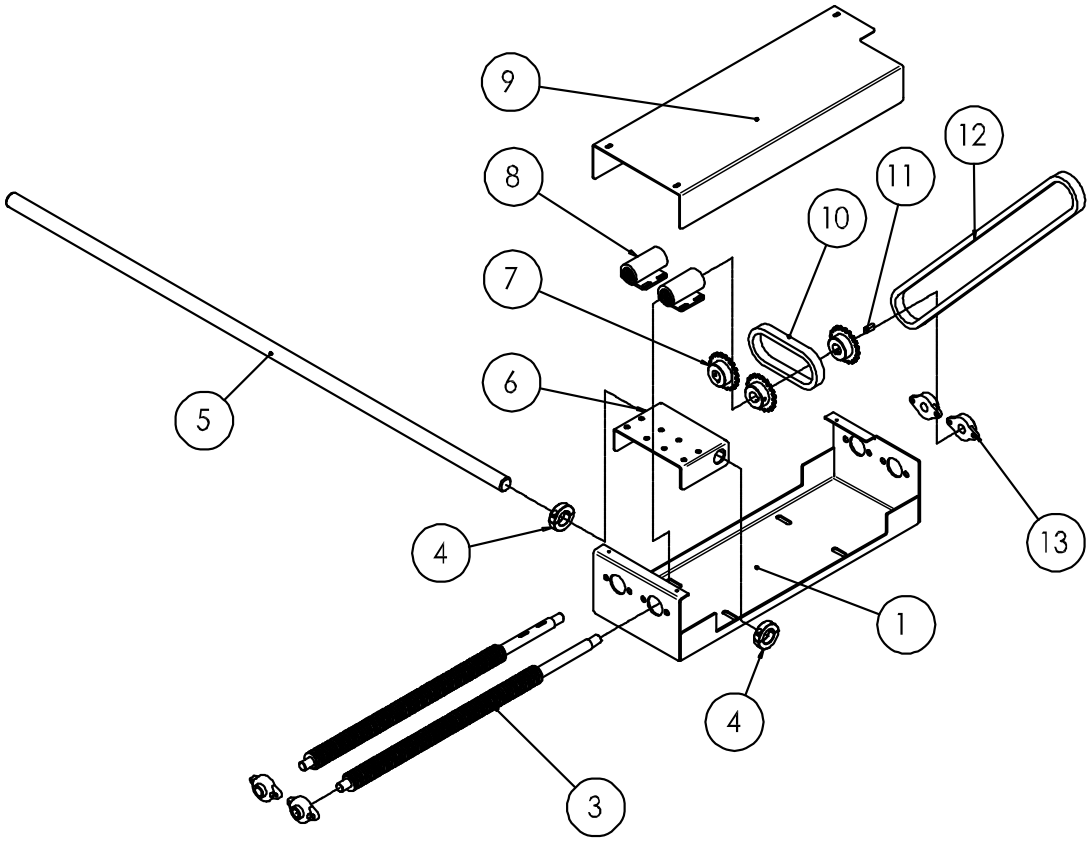

Adjust Connect Unit				
Item	**Part Number**	**Description**	**Reference**	**Q'ty**
1	5031214	Frame		1
2	5031215	Fix Block	P02-0060900	2
3	5031216	Thread Rod	P02-0323900	2
4	5031217	Fix Block	P02-0060800	2
5	5031218	Shaft	P02-0324000	1
6	5031219	Cover		1
7	5030905	Sprocket	P0702-0010500	3
8	5031067	Thread Rod Seat	P02-0328900	2
9	5031220	Cover	P01-053680A	1
10	5031221	Chain	P0702-0011800	1
11	5031222	Key 7*7*20	P1108-010707020G	1
12	5031223	Chain	P0702-0011900	1
13	5031224	Bearing	P1104-1015010	4

Magazine Belt – Right Unit

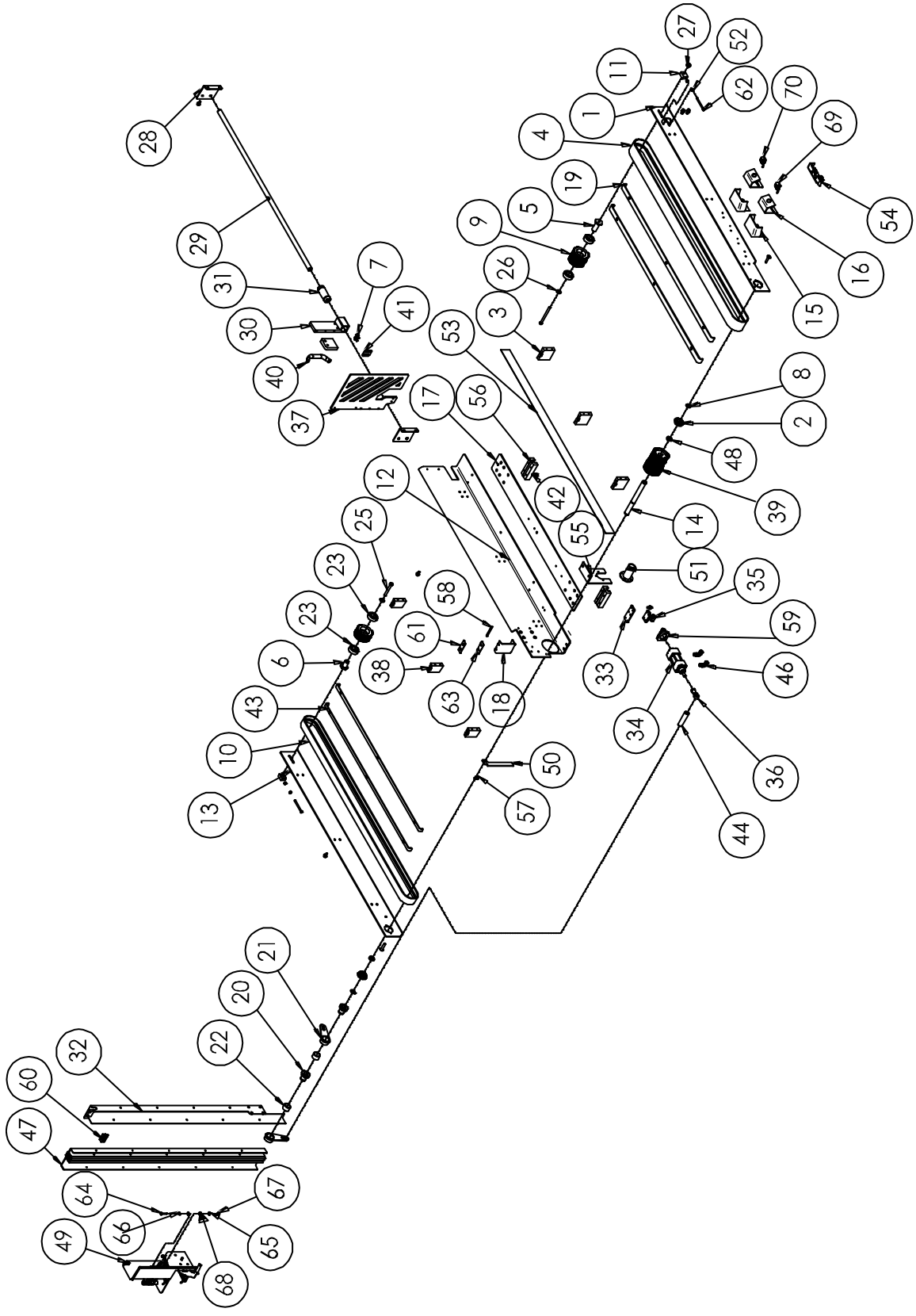

Magazine Belt – Right Unit				
Item	**Part Number**	**Description**	**Reference**	**Q'ty**
1	5031226	Base Plate		1
2	5031227	Bearing	P1104-076004ZZ1	2
3	5031228	Spacer Block	P02-0353200	3
4	5031229	Belt	P0902-000870A	1
5	5031230	Shaft-Long	P02-0353400	1
6	5031231	Shaft-Short	P02-0353500	1
7	5030793	Screw M6*12L	P1101-0906012AN	9
8	5031232	C Clip	P1105-0120B	2
9	5031233	Driven Pulley	P06-0073000	1
10	5031234	Belt	P0902-000920A	1
11	5031235	Adjusting Block	P02-035310A	2
12	5031236	Base Plate		1
13	5031237	Base Plate		1
14	5031238	Shaft	P02-0353600	1
15	5031239	Sensor Cover		2
16	5031240	Sensor Seat		2
17	5031241	Base		1
18	5031242	Support		1
19	5031243	Support Plate		2
20	5031244	Shaft	P02-0047500	2
21	5031245	Arm	P01-010430A	2
22	5031246	Bearing	P1104-17HF25200	2
23	5030865	Bearing	P1104-026204ZZ0	4
24	5031247	Driven Pulley	P06-0072900	1
25	5030947	Screw M8*100L	P1101-1008100AZ	1
26	5031248	Washer 8	P1103-01082203N	2
27	5031075	Nut M10	P1102-0110BZ	1
28	5031249	Shaft Bracket		2
29	5031250	Support Shaft	P02-035390A	1
30	5031251	Holding Block	P02-0354000	1
31	5031252	Linear Bushing	P1104-01201	1
32	5031253	Cover		1
33	5031254	Cylinder Fix Plate		1

Magazine Belt – Right Unit				
Item	**Part Number**	**Description**	**Reference**	**Q'ty**
34	5031255	Advance Cylinder - Right	P0319-C13744	1
35	5031256	Cylinder Fixer	P0403-020000700	1
36	5031257	Rod End	P1104-060000100	1
37	5031258	Holding Plate	P02-035150A	1
38	5031259	Fix Block	P02-0353300	3
39	5031260	Driving Pulley	P06-0073100	1
40	5030817	Handle	P1112-0000700	1
41	5031261	Advance Plate	P01-0526100	1
42	5030869	Screw M8*20L	P1101-0908020AN	2
43	5031262	Belt Support		2
44	5031263	Ring	P02-035370A	1
45	5031264	Stopper	P06-006690A	1
46	5031265	Connector	P0401-0002300	2
47	5031266	Flexible Cover	P06-0062500	1
48	5031267	Ring	P02-0353800	2
49	5031268	Sensor Plate - Right Unit	***	1
50	5031269	Guide Plate - Right		1
51	5031270	Thread Rod Seat	P02-0323300	1
52	5031271	Nut M6	P1102-0106AZ	4
53	5031272	Guide Sticker	P1002-0010000	1
54	5031273	Bottom Guide - Right Unit	***	1
55	5031274	Bracket		1
56	5030959	Sliding Block	P1104-140000800	2
57	5031021	Screw M5*12L	P1101-0905012AN	2
58	5031275	Fix Plate		1
59	5031276	Cylinder Fixer	P0403-010000200	1
60	5031277	Plastic Block	P1104-24WJRM0110LL0	1
61	5031278	Support Plate		1
62	5031279	Screw M6*70l	P1101-0506070AN	2
63	5031280	Support Plate		1
64	5031281	Screw M6*30L	P1101-1006030AZ	1
65	5031282	Washer 6	P1103-010613N	2

Magazine Belt – Right Unit				
Item	**Part Number**	**Description**	**Reference**	**Q'ty**
66	5031283	Spring Washer 6	P1103-0206Z	1
67	5031284	Nut M6	P1102-0106BZ	1
68	5031285	Ring	P06-0073200	1
69	5031286	No Box Sensor	P0319-C13725	1
70	5031287	Low Box Sensor	P0319-C13726	1

Sensor Plate – Right Unit

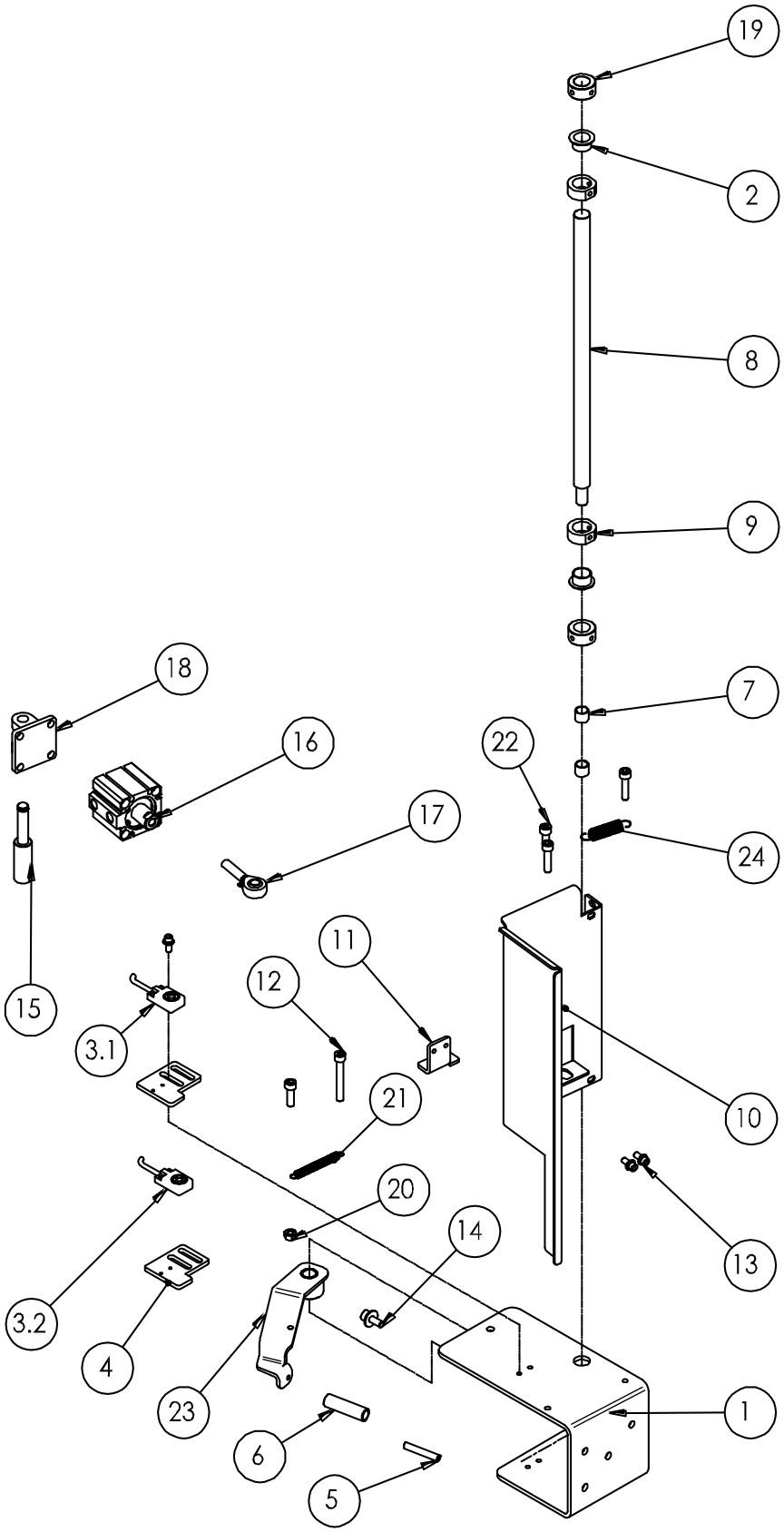

Sensor Plate – Right Unit				
Item	**Part Number**	**Description**	**Reference**	**Q'ty**
1	5031289	Bracket	P01-0526900	1
2	5030976	Bushing	P1104-0315100	1
3.1	5031290	Right Upper Sensor	P0319-C13727	1
3.2	5031291	Right Lower Sensor	P0319-C13729	1
4	5031292	Sensor Plate	P01-0527100	2
5	5031293	Roller Shaft	P02-0322800	1
6	5031294	Sensor Roller	P06-0062200	1
7	5030922	Bushing	P1104-081012100	2
8	5031295	Shaft	P02-0323000	1
9	5031296	Fix Ring	P02-0069800	2
10	5031297	Sensor Plate		1
11	5031298	Detect Plate		1
12	5031299	Screw M6*45L	P1101-0506045AZ	1
13	5031021	Screw M5*12L	P1101-0905012AN	3
14	5030793	Screw M6*12L	P1101-0906012AN	1
15	5031300	Cylinder Shaft	P02-0351300	1
16	5031301	Cylinder	P0319-C13741	1
17	5031257	Rod End	P1104-060000100	1
18	5031302	Cylinder Seat	P0403-050000400	1
19	5030906	Fix Ring	P02-0083500	2
20	5031271	Nut M6	P1102-0106AZ	1
21	5031303	Spring	P1202-0002700	1
22	5031304	Screw M6*16L	P1101-0506016AN	1
23	5031305	Sensor Arm		1
24	5031184	Spring	P1202-0004700	1

Bottom Guide – Right Unit

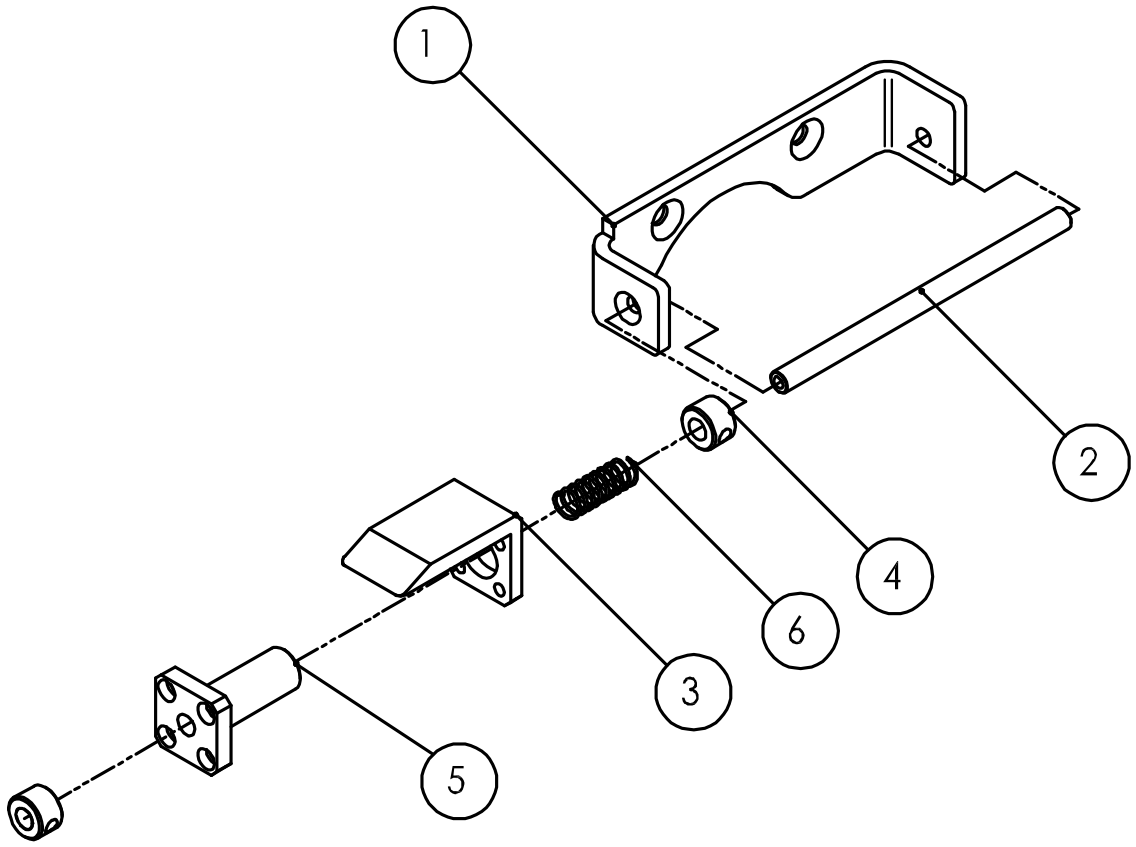

Bottom Guide – Right Unit				
Item	**Part Number**	**Description**	**Reference**	**Q'ty**
1	5031307	Support Bracket		1
2	5031308	Shaft	P02-0327500	1
3	5031309	Bottom Guide	P06-006230B	1
4	5031310	Fix Ring	P02-0324300	2
5	5031311	Linear Bushing	P1104-01060	1
6	5031103	Spring	P1201-0003300	1

Magazine Belt – Left Unit

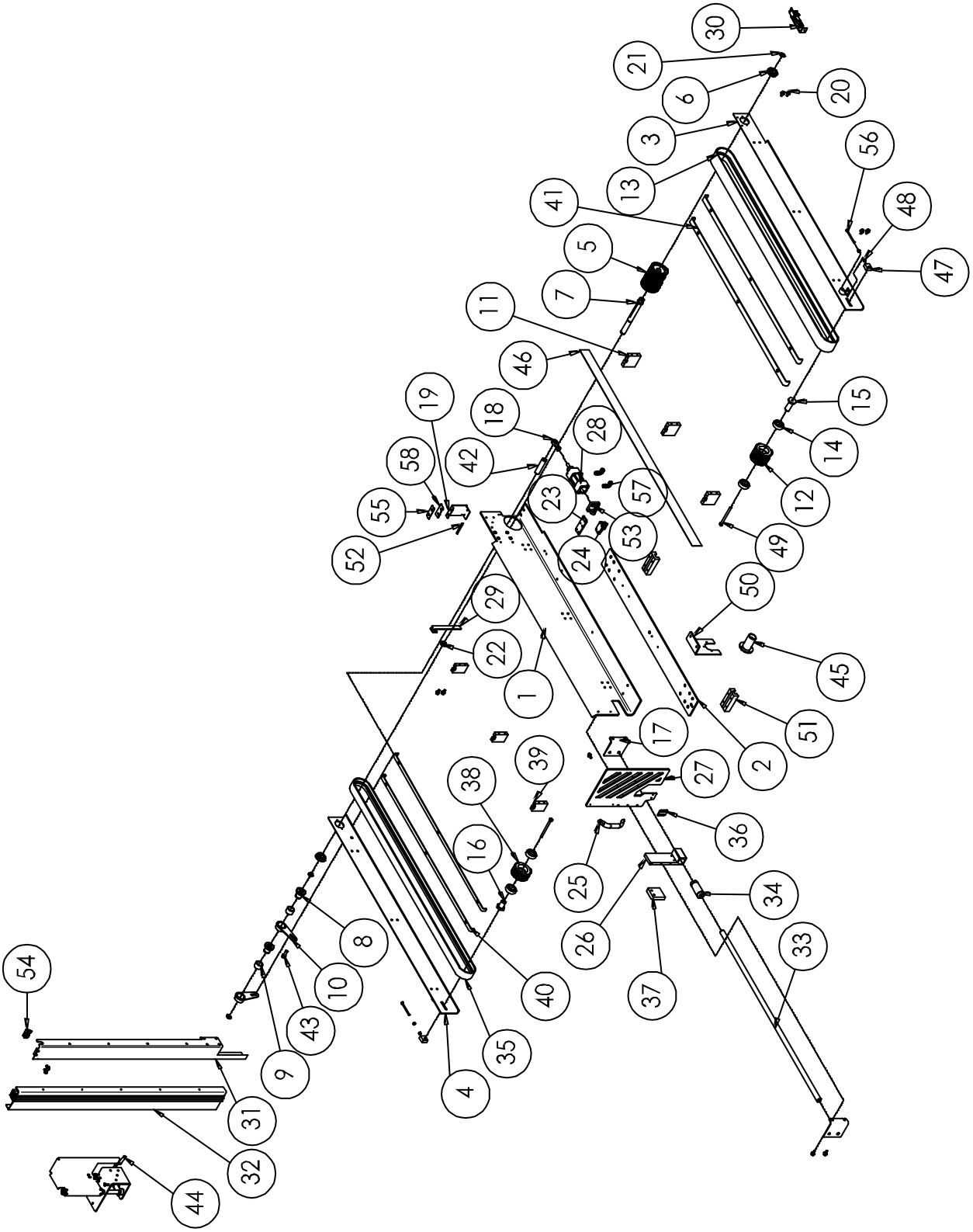

Magazine Belt – Right Unit				
Item	**Part Number**	**Description**	**Reference**	**Q'ty**
1	5031313	Base Plate		1
2	5031314	Base		1
3	5031315	Base Plate		1
4	5031316	Base Plate		1
5	5031260	Driving Pulley	P06-0073100	1
6	5031227	Bearing	P1104-076004ZZ1	2
7	5031317	Pulley Shaft	P02-0353600	1
8	5031244	Shaft	P02-0047500	2
9	5031246	Bearing	P1104-17HF25200	2
10	5031245	Arm	P01-010430A	2
11	5031228	Spacer Block	P02-0353200	3
12	5031233	Driven Pulley	P06-0073000	1
13	5031229	Belt	P0902-000870A	1
14	5030865	Bearing	P1104-026204ZZ0	4
15	5031230	Shaft-Long	P02-0353400	1
16	5031231	Shaft-Short	P02-0353500	1
17	5031318	Shaft Bracket		2
18	5031319	Rod End	P1104-060000400	1
19	5031320	Support Seat		1
20	5030793	Screw M6*12l	P1101-0906012AN	11
21	5031232	C Clip	P1105-0120B	3
22	5031267	Ring	P02-0353800	2
23	5031321	Cylinder Fix Plate		1
24	5031256	Cylinder Fixer	P0403-020000700	1
25	5030817	Handle	P1112-0000700	1
26	5031251	Holding Block	P02-0354000	1
27	5031258	Holding Plate	P02-035150A	1
28	5031322	Advance Cylinder - Left	P0319-C13743	1
29	5031323	Guide Plate	P01-0527600	1
30	5031324	Bottom Guide - Left Unit	***	1
31	5031325	Cover		1
32	5031266	Flexible Cover	P06-0062500	1
33	5031250	Support Shaft	P02-035390A	1

Magazine Belt – Right Unit				
Item	**Part Number**	**Description**	**Reference**	**Q'ty**
34	5031252	Linear Bushing	P1104-01201	1
35	5031234	Belt	P0902-000920A	1
36	5031326	Advance Plate	P01-0526100	1
37	5031264	Stopper	P06-006690A	1
38	5031247	Driven Pulley	P06-0072900	1
39	5031327	Support Block	P02-0353300	3
40	5031328	Support Plate		2
41	5031329	Support Plate		2
42	5031263	Ring	P02-035370A	1
43	5030849	Screw M10*25L	P1101-0910025AN	1
44	5031330	Sensor Plate - Left Unit	***	1
45	5031331	Thread Rod Seat	P02-0323100	1
46	5031332	Sliding Sticker	P1002-0010000	1
47	5031235	Adjusting Block	P02-035310A	2
48	5031271	Nut M6	P1102-0106AZ	4
49	5030947	Screw M8*100L	P1101-1008100AZ	2
50	5031333	Fix Plate		1
51	5030959	Sliding Block	P1104-140000800	2
52	5031334	Fix Plate		1
53	5031276	Cylinder Fixer	P0403-010000200	1
54	5031277	Plastic Block	P1104-24WJRM0110LL0	1
55	5031335	Support Plate	P01-0613000	1
56	5031279	Screw M6*70L	P1101-0506070AN	2
57	5031265	Connector	P0401-0002300	2
58	5031336	Support Plate	P01-0610500	1

Bottom Guide – Left Unit

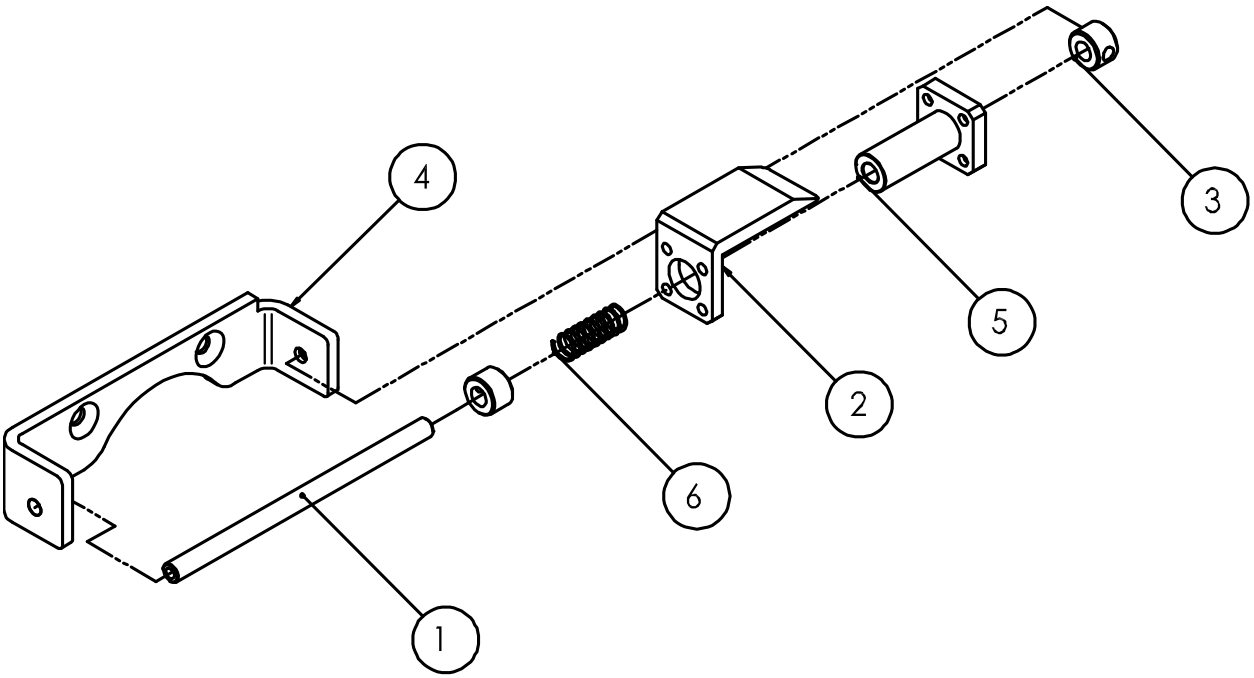

Bottom Guide – Left Unit				
Item	**Part Number**	**Description**	**Reference**	**Q'ty**
1	5031308	Shaft	P02-0327500	1
2	5031309	Bottom Guide	P06-006230B	1
3	5031310	Fix Ring	P02-0324300	2
4	5031338	Support Bracket	P01-052820A	1
5	5031311	Linear Bushing	P1104-01060	1
6	5031103	Spring	P1201-0003300	1

Sensor Plate – Left Unit

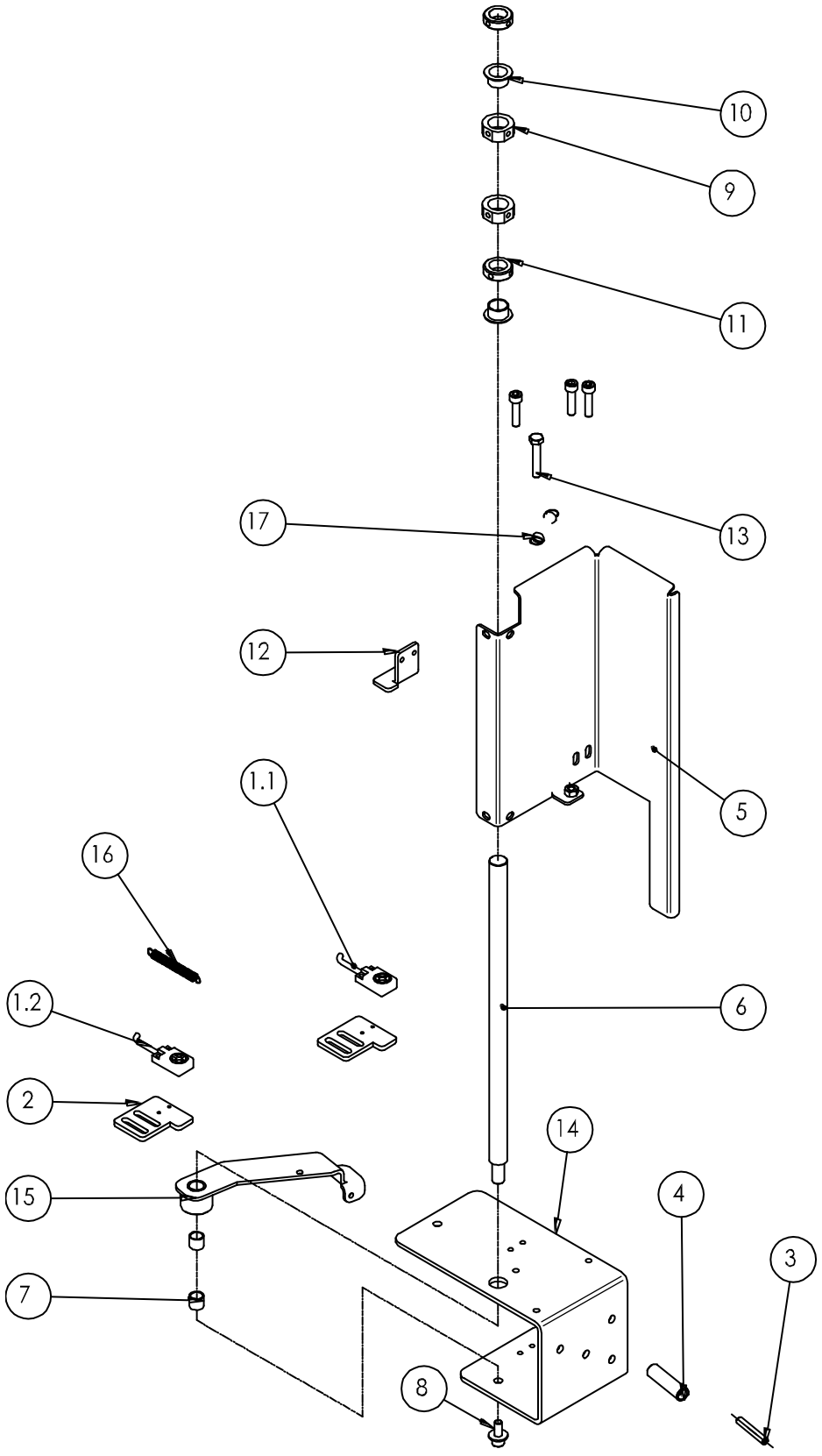

Sensor Plate – Left Unit				
Item	**Part Number**	**Description**	**Reference**	**Q'ty**
1.1	5031340	Left Upper Sensor	P0319-C13728	1
1.2	5031341	Left Lower Sensor	P0319-C13730	1
2	5031342	Sensor Adjust Plate	P01-0527100	2
3	5031293	Roller Shaft	P02-0322800	1
4	5031294	Sensor Roller	P06-0062200	1
5	5031343	Sensor Plate	P01-052750A	1
6	5031295	Shaft	P02-0323000	1
7	5030922	Bushing	P1104-081012100	2
8	5030793	Screw M6*12L	P1101-0906012AN	1
9	5031296	Fix Ring	P02-0069800	2
10	5030976	Bushing	P1104-0315100	2
11	5031344	Fix Ring	P02-0111600	2
12	5031345	Detect Plate	P01-0527300	1
13	5031346	Screw M6*35L	P1101-1006035AZ	1
14	5031347	Bracket	P01-0526700	1
15	5031348	Sensor Arm	P01-052780B	1
16	5031303	Spring	P1202-0002700	1
17	5031349	Spring	P1102-0004700	1

Separator Suction Unit

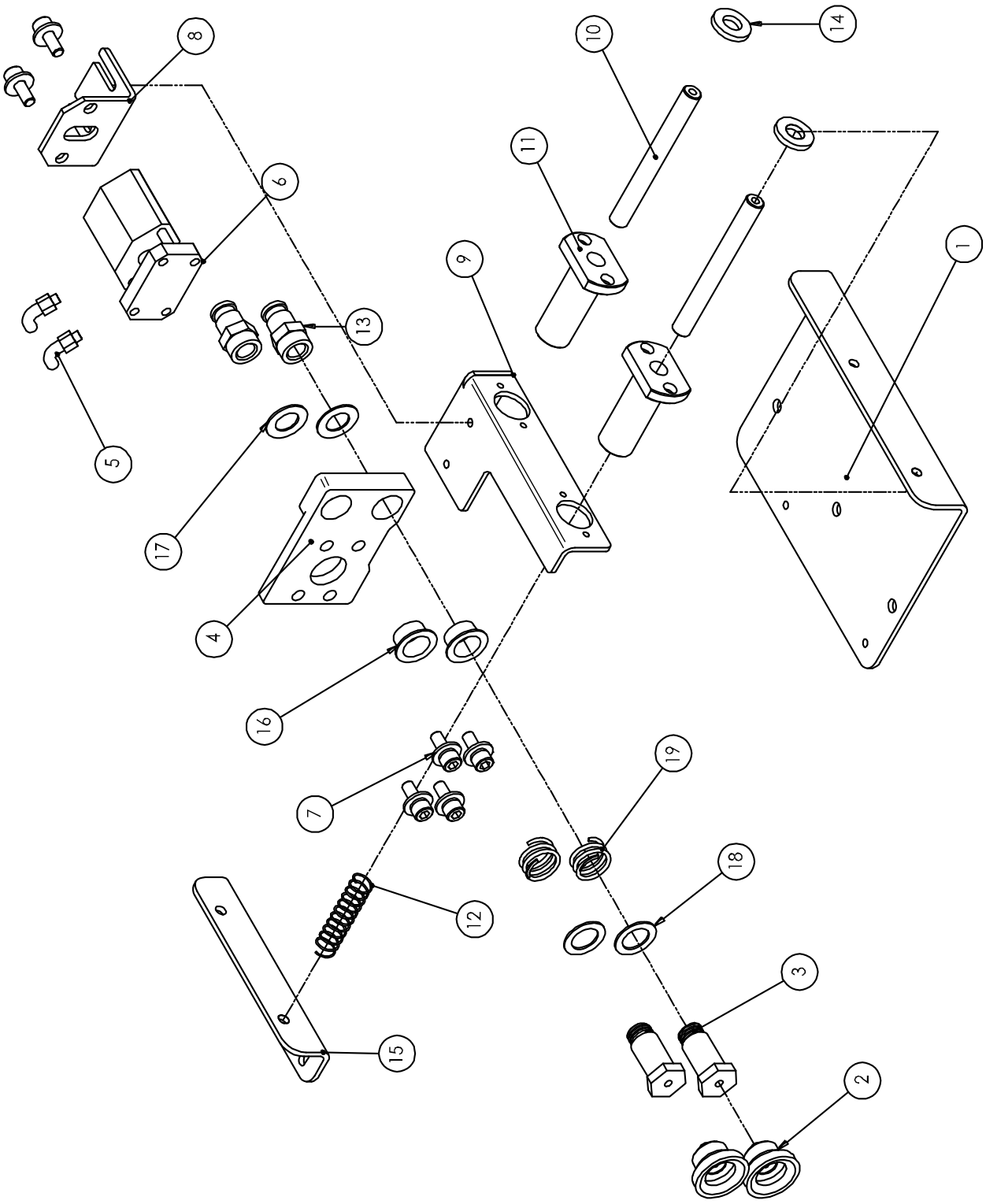

Separator Suction Unit				
Item	**Part Number**	**Description**	**Reference**	**Q'ty**
1	5031351	Seat		1
2	5031352	Suction Cup	P0407-040000500	2
3	5031353	Shaft	P02-032260A	2
4	5031354	Fix Plate	P02-0393500	1
5	5031008	Connector	P0401-0002600	2
6	5030752	Cylinder	P0319-C13706	1
7	5030793	Screw M6*12L	P1101-0906012AN	6
8	5031355	Cylinder Bracket	P01-0541500	1
9	5031356	Cylinder Fix Plate	P01-053090A	1
10	5031357	Shaft	P02-032730A	2
11	5031358	Bushing	P1104-0910020	2
12	5031359	Spring	P1201-0004400	1
13	5031360	Connector	P0401-0003000	2
14	5031361	Cushion	P06-0072800	2
15	5031362	Fix Plate		1
16	5030976	Bushing	P1104-0315100	2
17	5031363	Spacer	P01-0611200	2
18	5031364	Spacer	P01-0611100	2
19	5031365	Spring	P1201-0011300	2

Main Electrical Panel

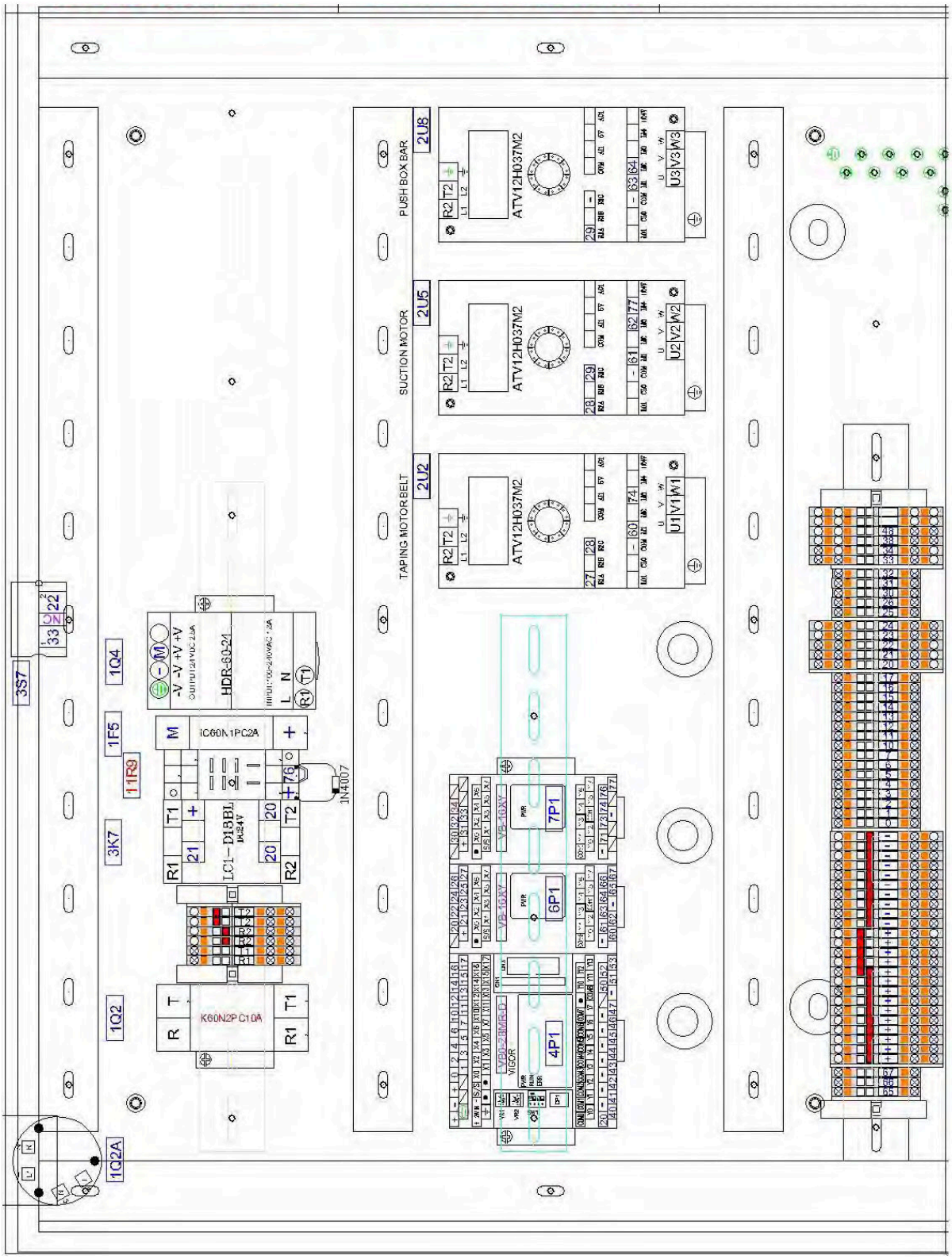

Control Panel & HMI

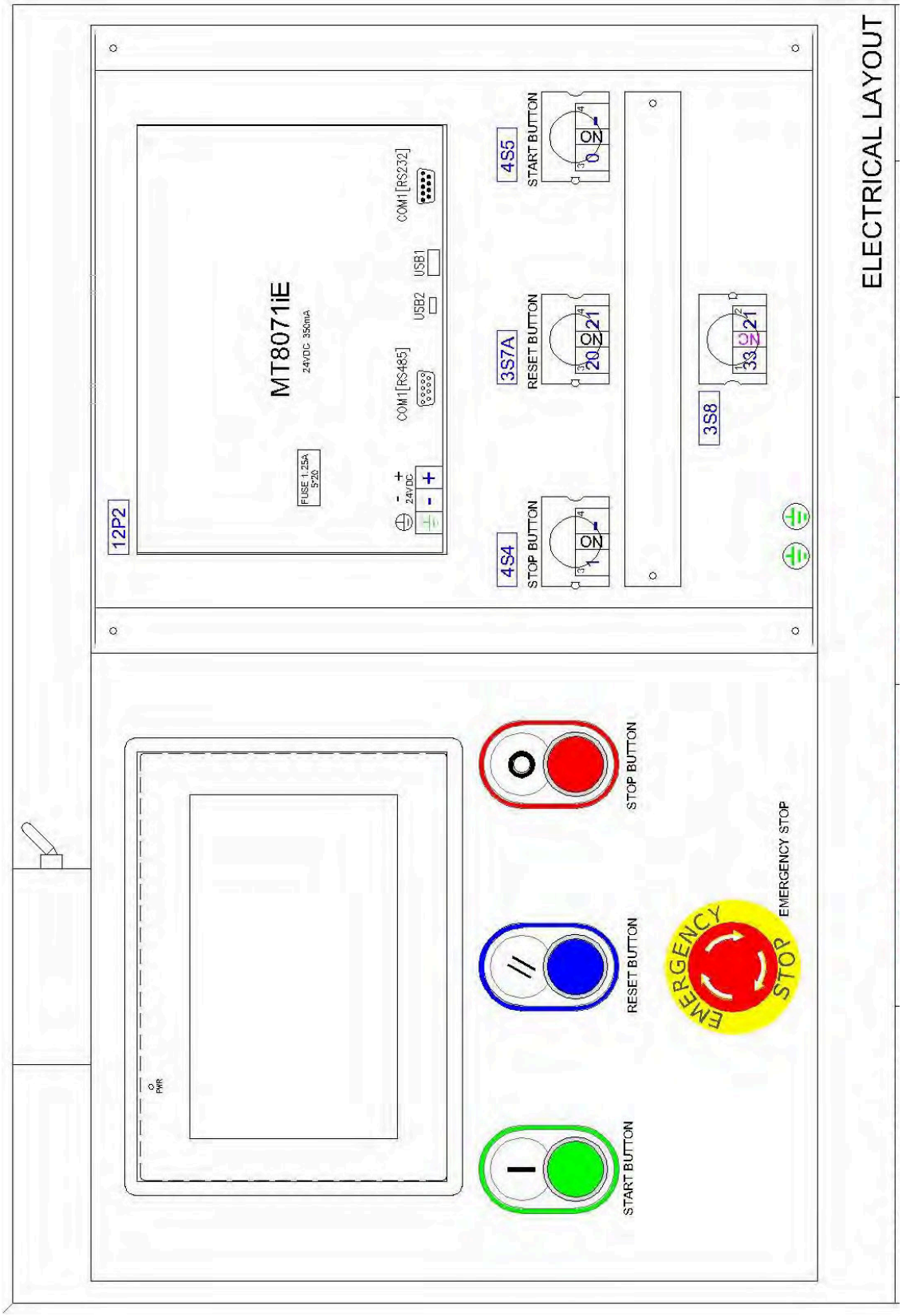

February 21, 2020

Electrical Parts List				
Item	**Part Number**	**Description**	**Reference**	**Q'ty**
1Q2	5030701	ZH-HD-48-BY	P0311-010002800	1
5S10	5030702	Pressure Detect	P0319-C13715	1
8Y2	5030703	Air Power Solenoid Valve Unit	P0319-C13739	1
8Y4	5030704	Sucker Solenoid Valve Unit	P0319-C13740	2
5S9	5030705	Pressure Detect	P0319-C13714	1
1Q2A	5030706	Fuse	P0305-010002800	1
1Q4	5030707	Power Supply	P0307-010002200	1
1F5	5030708	Fuse	P0305-010001500	1
2U2	5030709	Invertor (220VAC,1Ph) Invertor (110VAC,1Ph)	P0315-010000300 P0315-010000200	3 3
1M4	5030710	Motor,3Ph(C),220V/60Hz	P0503-0011300	1
1M4A	5030711	Motor,3Ph(CC),220V/60Hz	P0503-0012100	1
1M7	5030712	Motor,3Ph,220V/380V	P0503-0009300	1
1M10	5030713	Motor,3PH,220V/380V	P0503-0018700	1
3S5 3S5A 3S5B 3S5C 3S5D	5030714	Safety Switch	P0311-020000100	4
3S7 2S7A	5030715	E-Stop	P0313-010006300	2
3K7	5030715	Contactor	P0306-010000400	1
3S8	5030715	Button	P0313-010005900	1
4P1	5030715	PLC	P0308-010001400	1
4S5	5030715	Button	P0313-010005700	1
4S6	5030716	Button	P0313-010006900	1
4B7	5030716	Photo Eye	P0319-C13725	1
4B8	5030717	Photo Eye	P0319-C13726	1
4B9	5030718	Photo Eye	P0319-C13716	1
4B10	5030719	Photo Eye	P0319-C13717	1
5S1	5030720	Proximity Switch	P0319-C13720	1
5S2	5030721	Proximity Switch	P0319-C13731	1
5S3	5030722	Proximity Switch	P0319-C13732	1
5S4	5030723	Proximity Switch	P0319-C13733	1
5S5	5030724	Proximity Switch	P0319-C13734	1

Electrical Parts List				
Item	**Part Number**	**Description**	**Reference**	**Q'ty**
5S6 5S7	5030725	Photo Eye	P0302-020000600	2
5S8	5030726	Cylinder Sensor	P0319-C13747	1
6P1 7P1	5030727	PLC Expansion Module	P0308-010005200	2
6S8	5030728	Proximity Switch	P0319-C13727	1
6S9	5030729	Proximity Switch	P0319-C13728	1
7S3	5030730	Cylinder Sensor	P0319-C13748	1
7S4	5030731	Proximity Switch	P0319-C13729	1
7S7	5030731	Proximity Switch	P0319-C13719	1
10H8 10H9 10H10	5030732	Indicator Lamp	P0319-C13752	1
11R9	5030733	Relay (DC24V)	P0306-020000200	1

Main Panel Pneumatic Controls

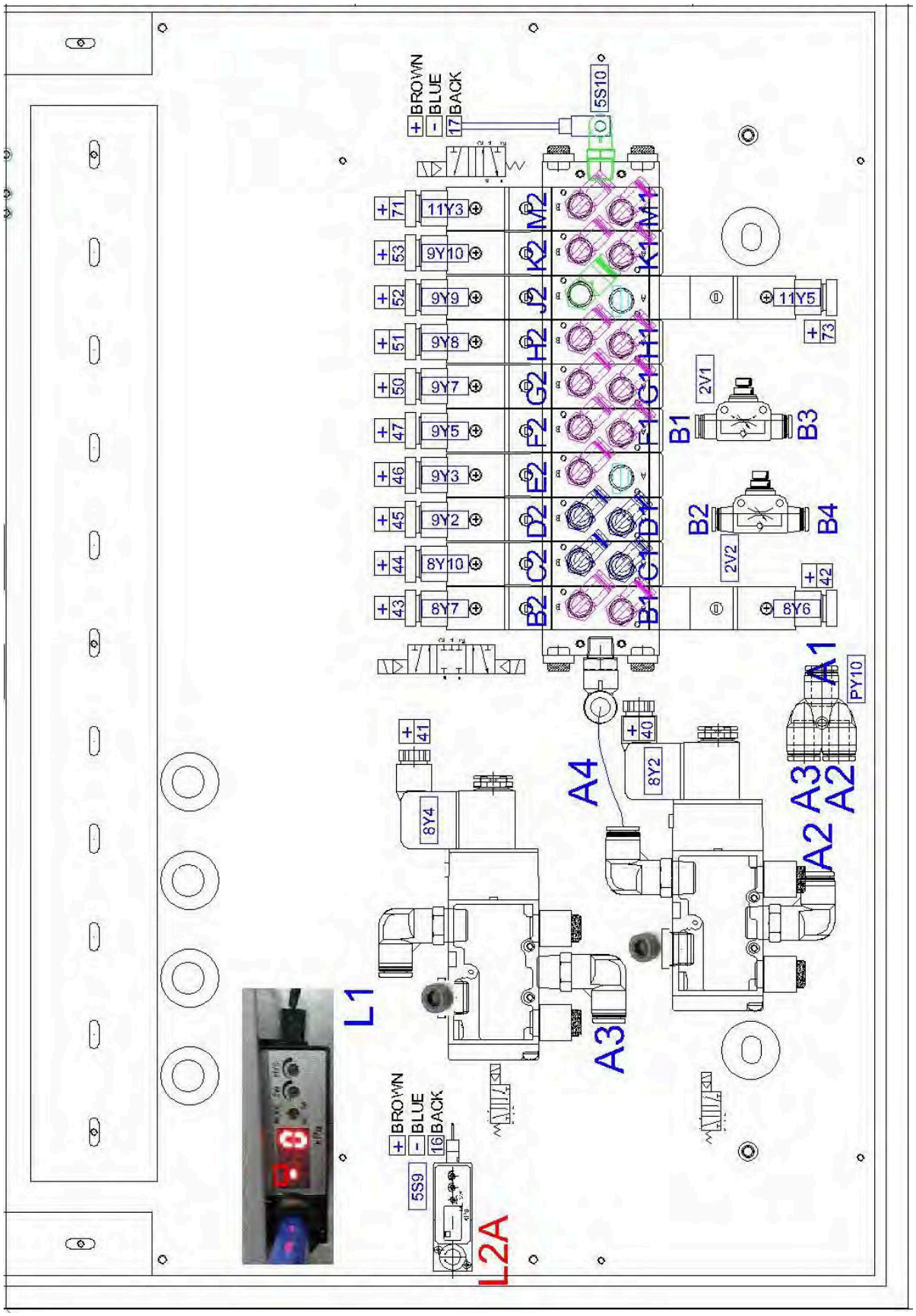

February 21, 2020

Pneumatic Parts List				
Item	**Part Number**	**Description**	**Reference**	**Q'ty**
1P1	5030742	Description	P0319-C13736	1
5S10	5030702	Air F.R.L Tube Fitting	P0319-C13715	1
8Y2	5030703	Pressure Detect	P0319-C13739	1
8Y4	5030704	Air Power Solenoid Valve Unit	P0319-C13740	2
1V5	5030743	Sucker Solenoid Valve Unit	P0319-C13748	1
5S9	5030705	Vacuum Generator	P0319-C13714	1
1V8 1V8A	5030744	Close Valve	P0401-0015700	2
1V10	5030744	Suction Cups	P0407-020000200	8
2C2	5030745	Cylinder	P0319-C13703	1
3V4 3V5	5030746	Connector	P0404-010000500	14
8Y6 (8Y7) 11Y5 (9Y9)	5030747	MVSC-220-4E2C-DC24-L	P0404-010000500	2
2C4	5030747	Cylinder	P0319-C13721	2
8Y10 9Y2 9Y3 9Y5 9Y7 9Y8 9Y10 11Y3	5030748	MVSC-220-4E1-DC24-L	P0404-010000300	8
2C6	5030748	Cylinder	P0319-C13706	1
2C7	5030749	Cylinder	P0319-C13705	1
2V8	5030750	Vacuum Generator	P0319-C13707	2
PCF6-02	5030750	Tube Connect	P0401-0003000	2
2V10	5030750	Suction Cups	P0407-040000500	2
3C1	5030750	Cylinder	P0319-C13709	1
3V1 3V2 3V4 3V6 4V1 4V2	5030750	Adjust Connect	P0401-0013200	6
3V1A	5030750	Cylinder	P0319-C13708	1

Pneumatic Parts List				
Item	**Part Number**	**Description**	**Reference**	**Q'ty**
PY6	5030750	Y-Connect	P0401-0002500	6
3C3	5030751	Cylinder	P0319-C13744	1
3C4 3C6	5030752	Cylinder Cylinder	P0319-C13722 P0319-C13723	1 1
3C7	5030753	Cylinder	P0319-C13745	1
	5030754	Cylinder Sensor	P0319-C13747	1
	5030755	Cylinder Sensor	P0319-C13748	1
3V6 3V6A	5030756	Valve	P0401-0013500	2
3C8	5030757	Cylinder	P0319-C13743	1
4C1 4C2	5030758	Cylinder	P0319-C13724	2
PC8	5030758	Connect	P0401-0006800	1
PX8	5030758	Y-Connect	P0401-0015300	2
PY8	5030758	Y-Connect	P0401-0011700	2
PLF8-02	5030758	Connect	P0401-0003300	8
L2 L3 L13	5030758	Vacuum Tube	P1601-0001500	
CB0	5030759	Protection	P0319-C13738	1

A: Main Air In — Filter / Regulator, Fittings & Hose

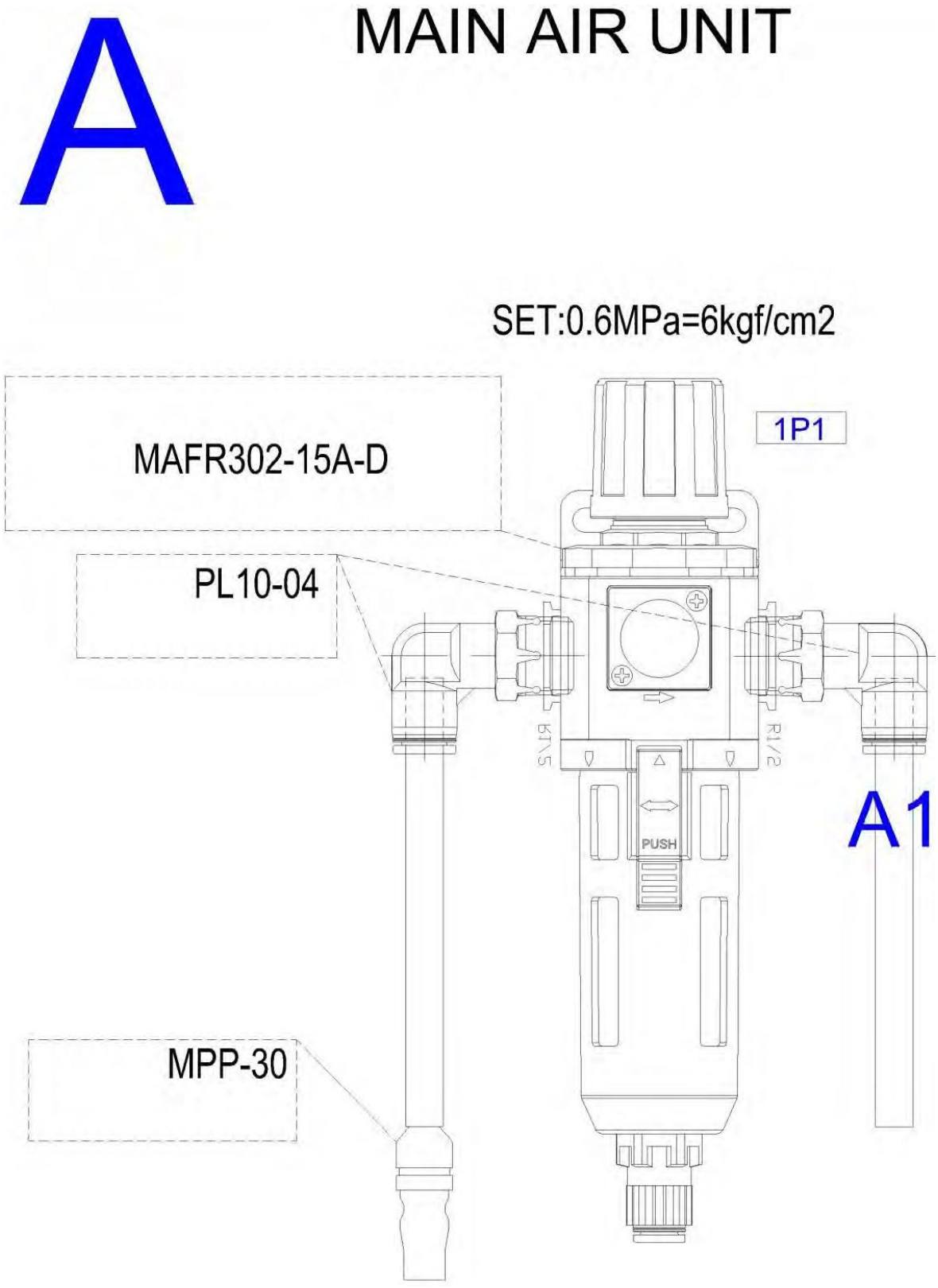

B: Carton Push-Down Cylinders, Fittings & Hoses

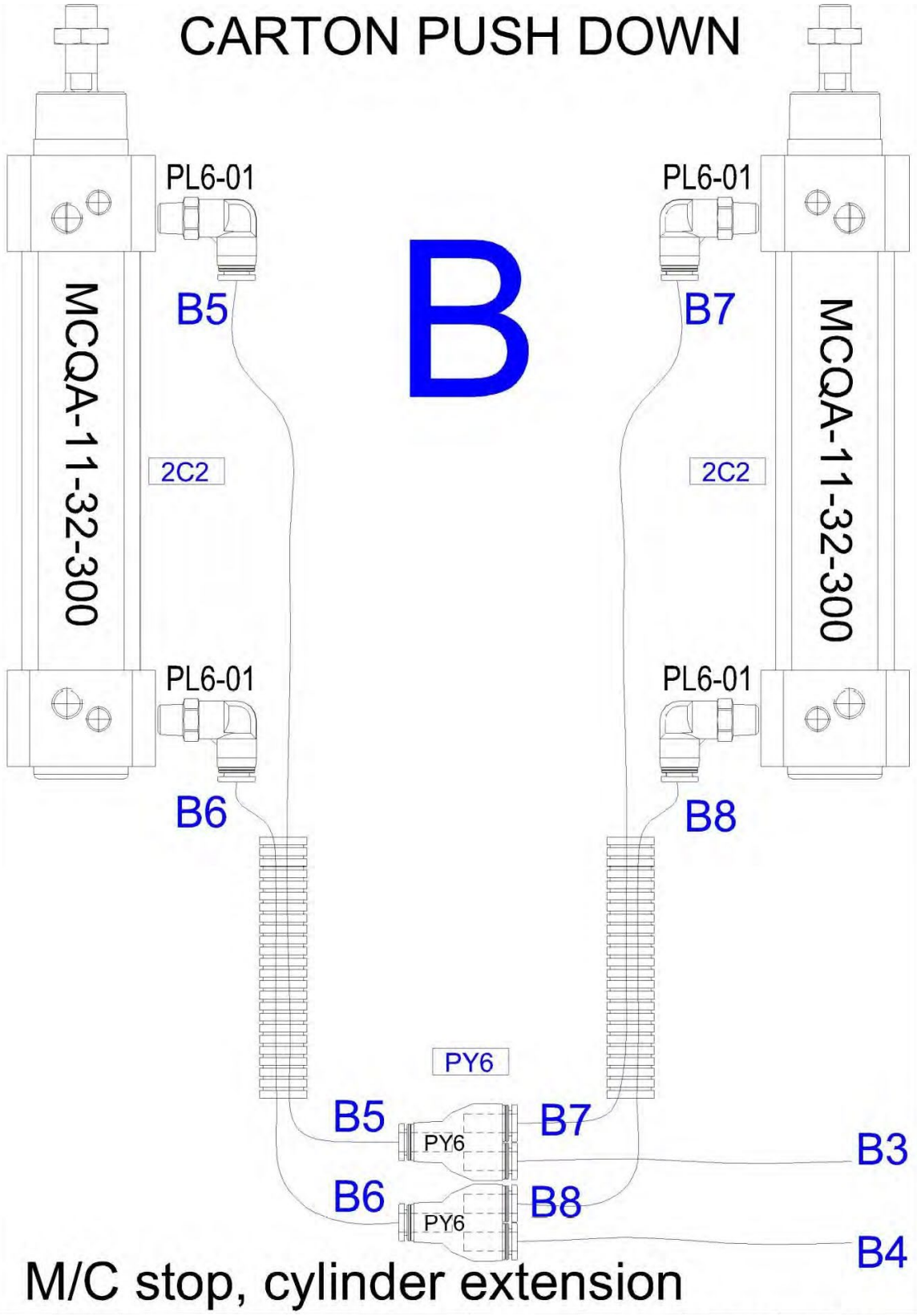

C: Carton Suction Cup Extension

CARTON SUCTION CUP EXTEND

C

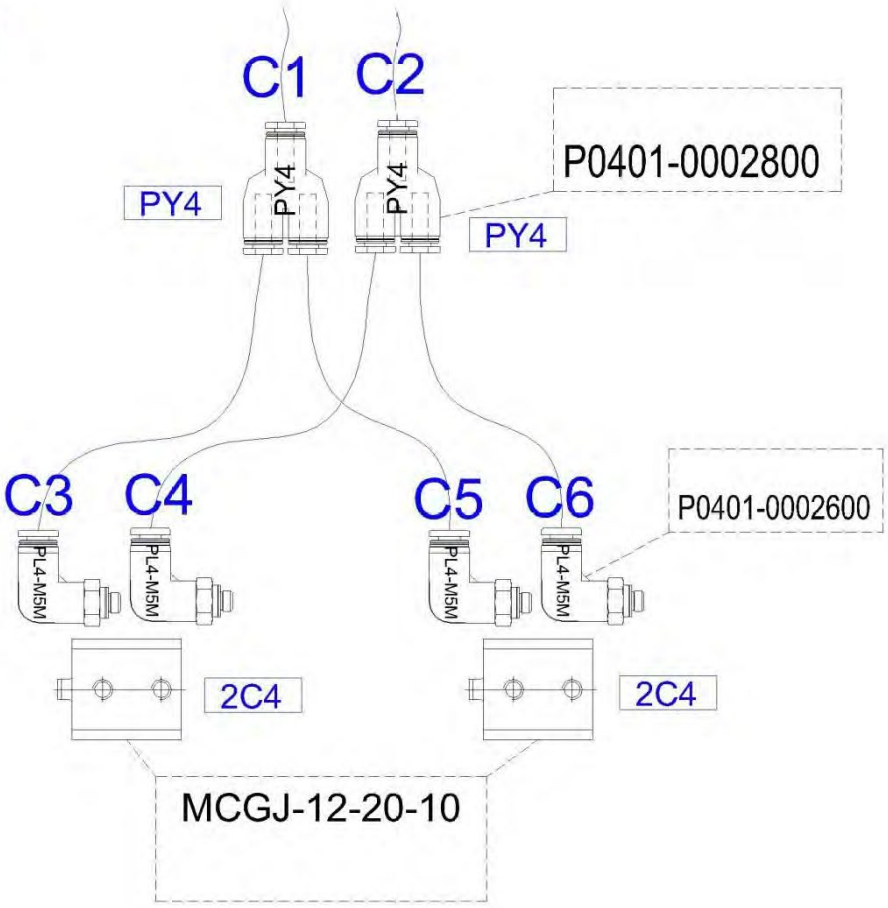

M/C stop, cylinder retract

D: Separator Suction Cup Extension

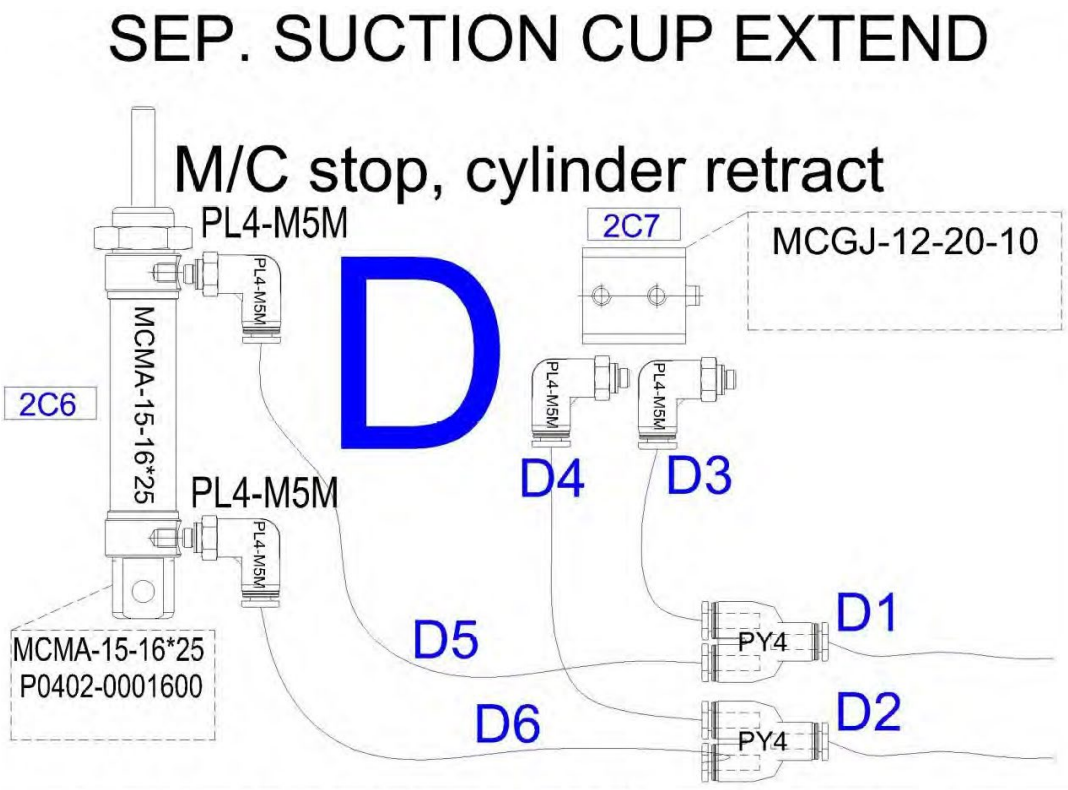

E: Separator Suction Cup Suction

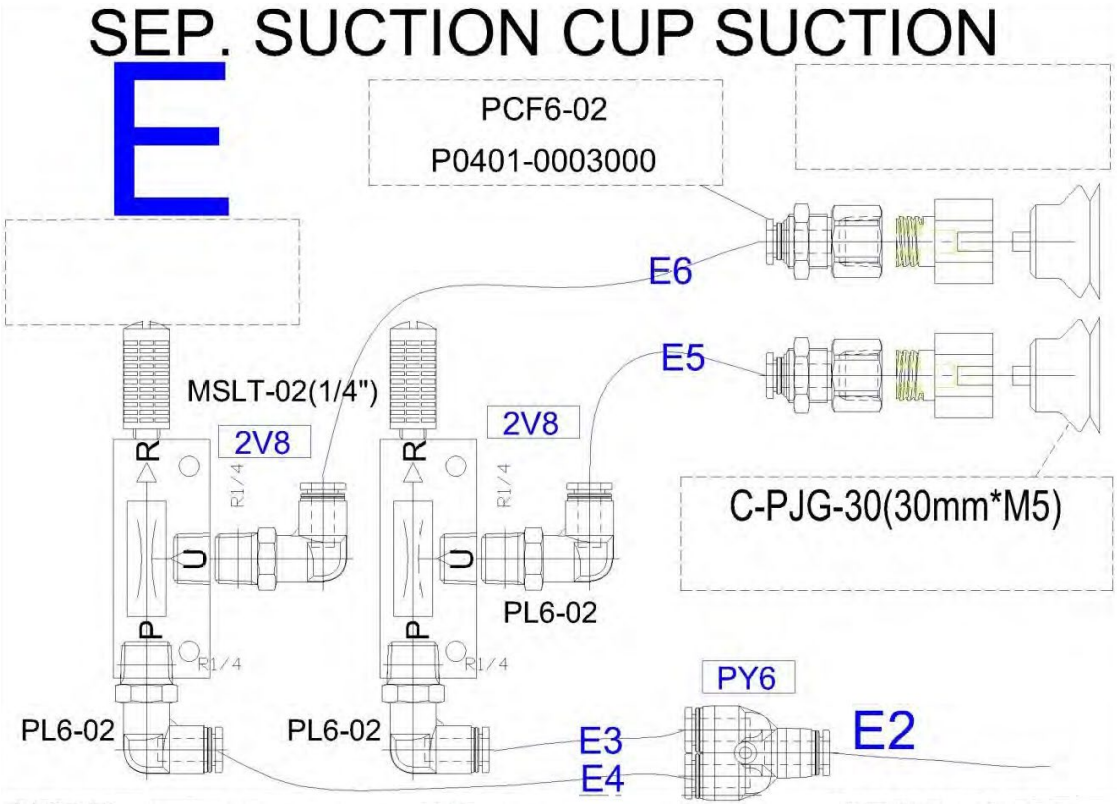

F: Magazine Stopper Cylinder & Fittings

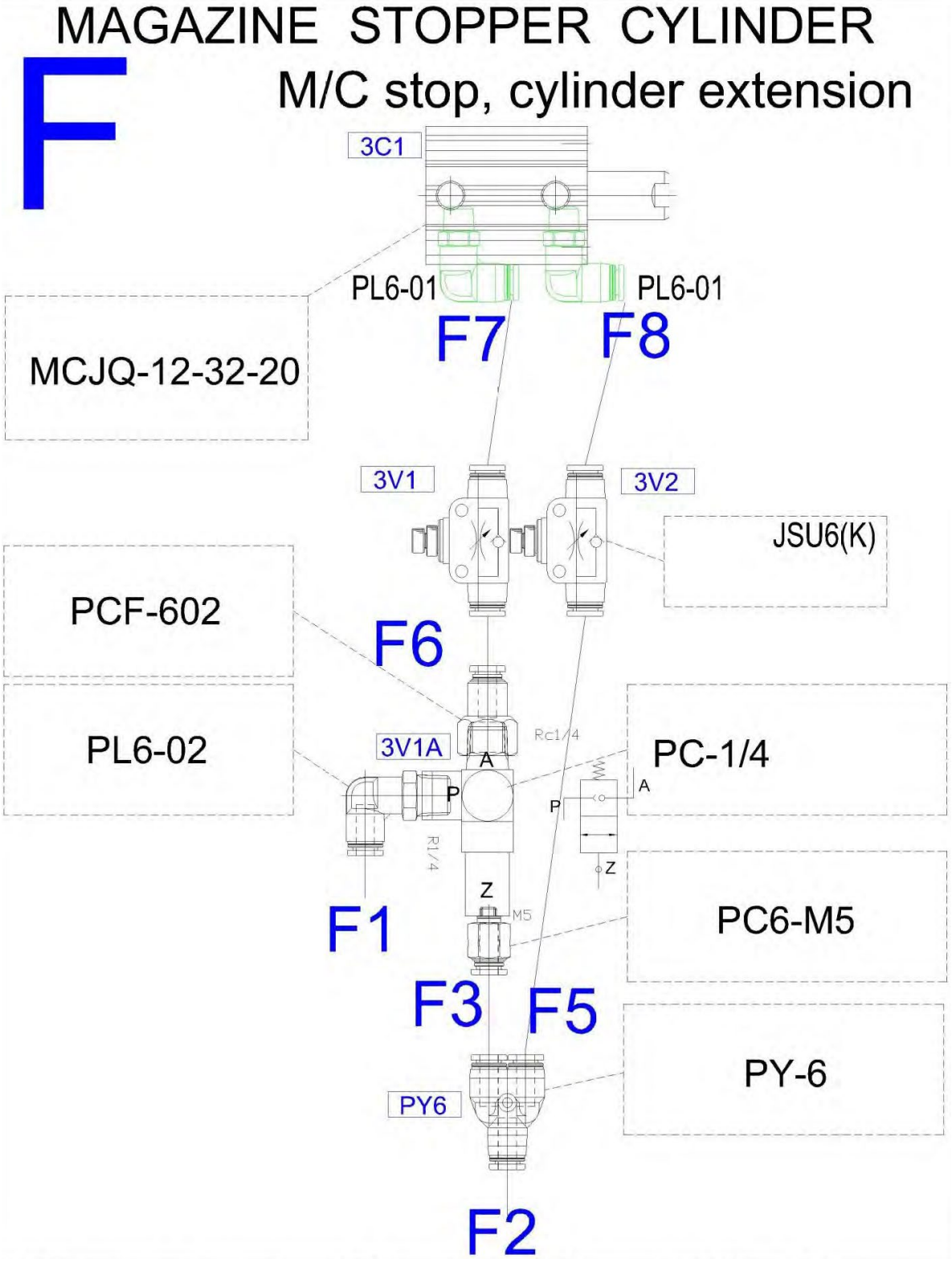

G & K: Magazine Forward Cylinders — Long Side & Wide Side

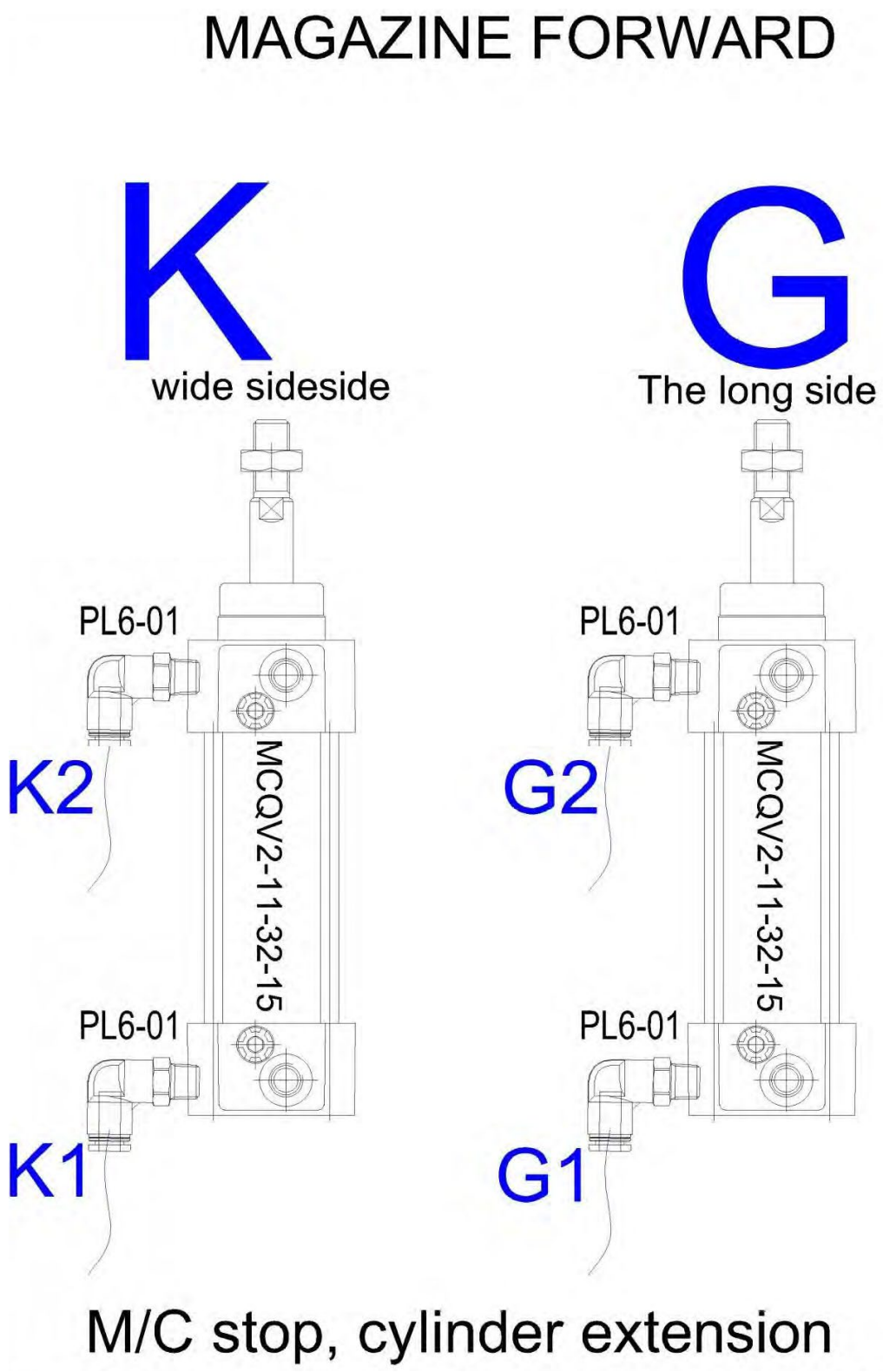

H: Minor Flap Folding Cylinders, Fittings & Hoses

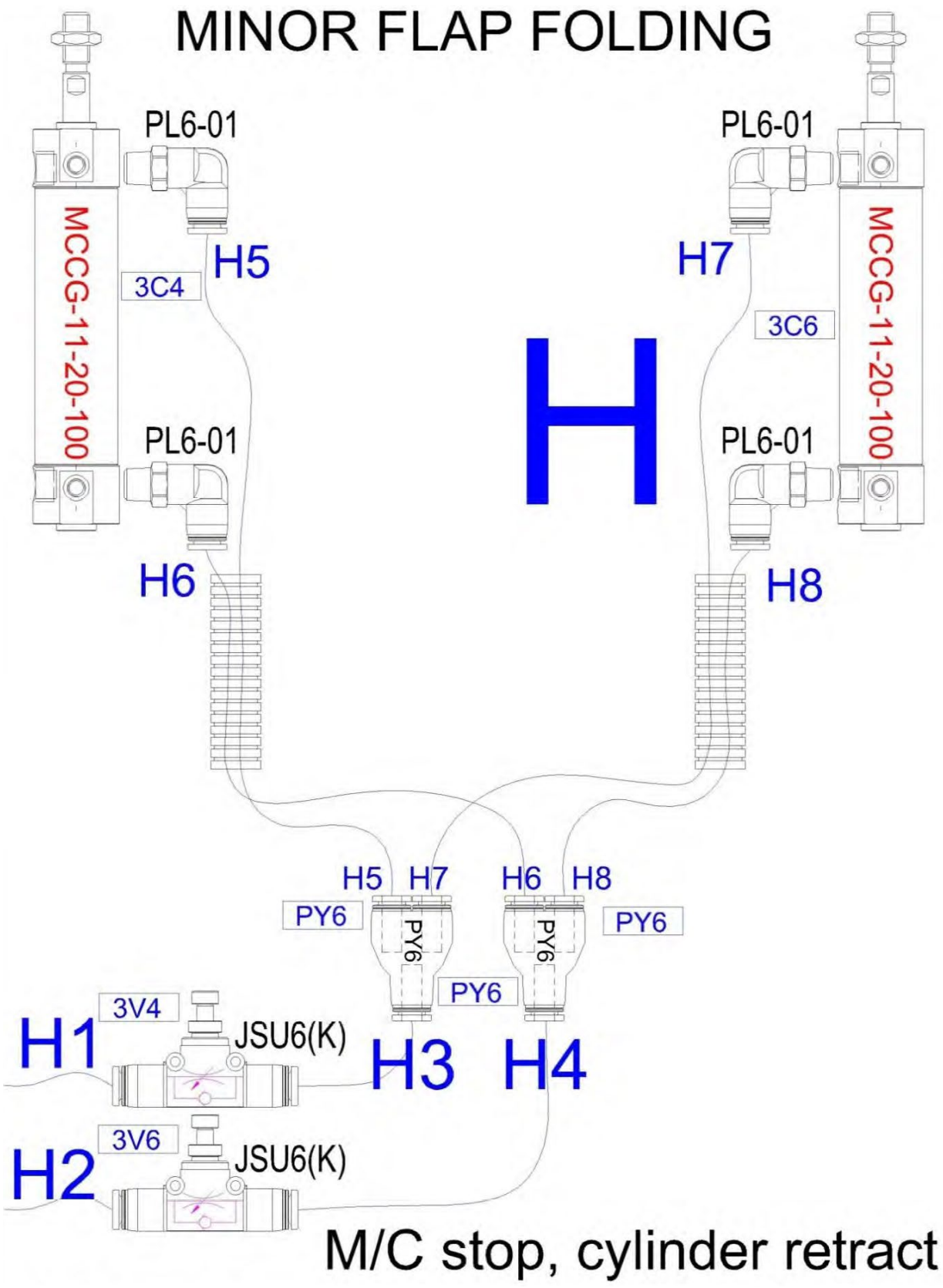

J: Major Flap Folding Rise Cylinders, Fittings & Hoses

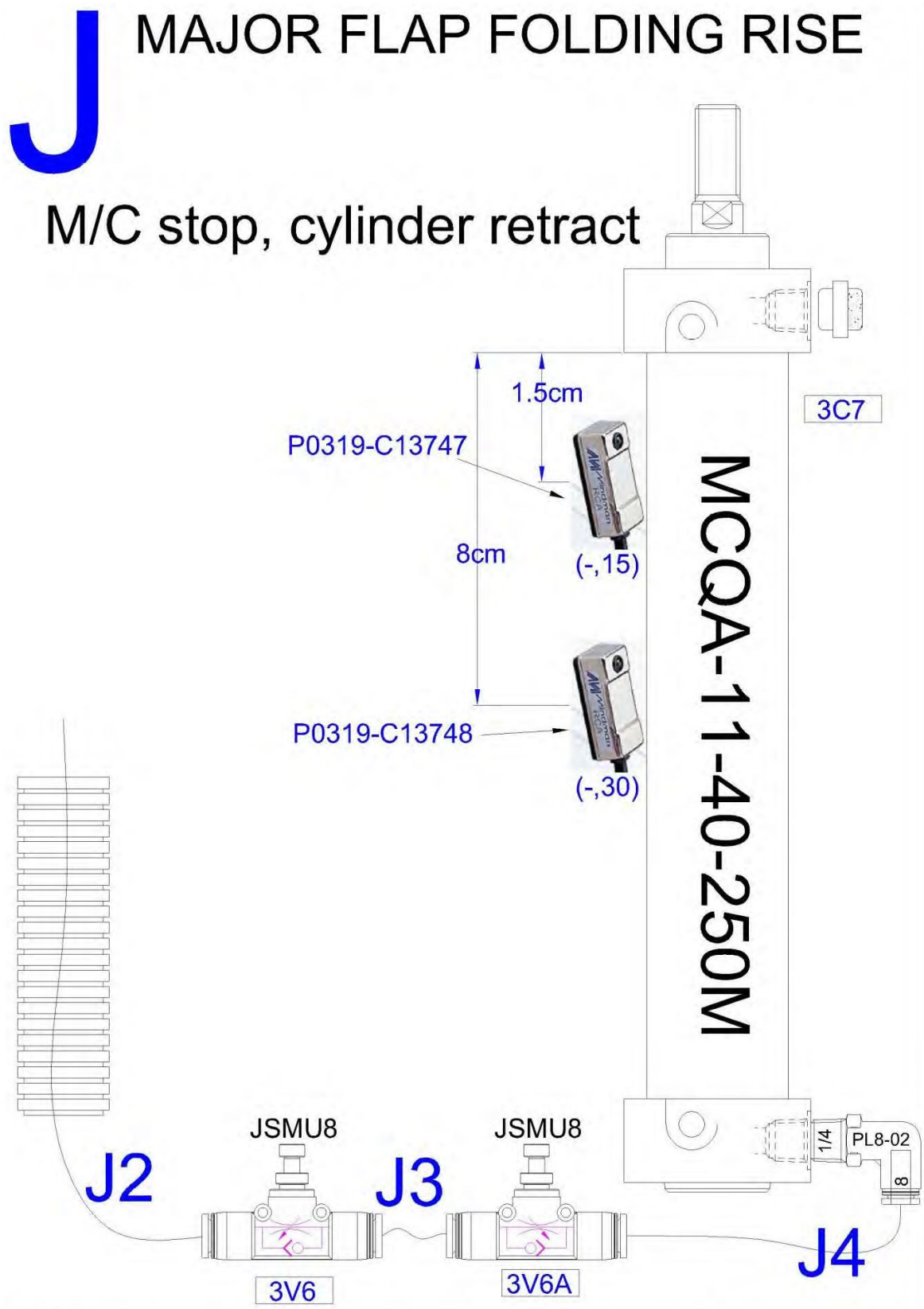

M: Major Flap Folding Cylinders, Fittings & Hoses

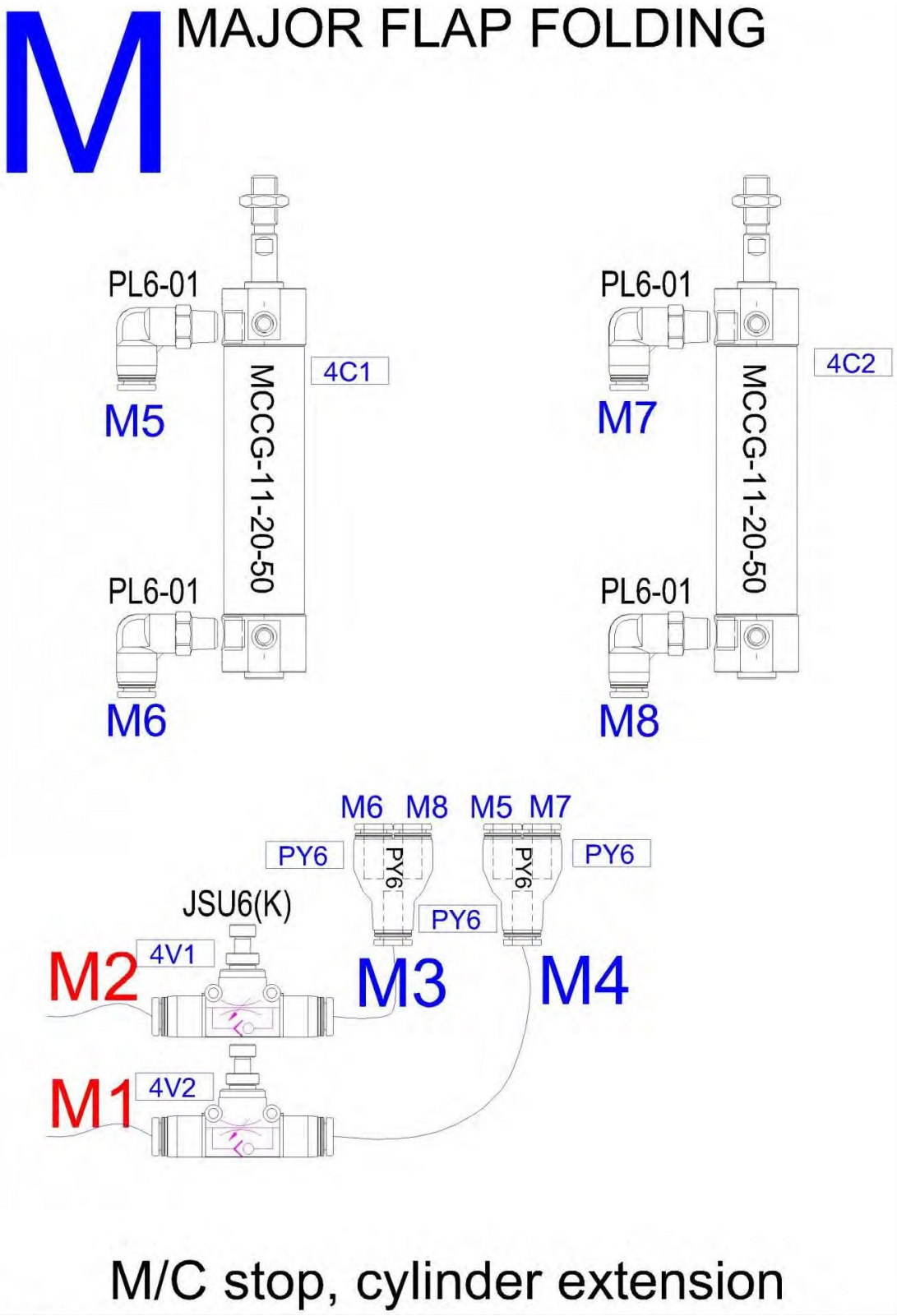

L: Carton Suction Cups, Hoses & Fittings

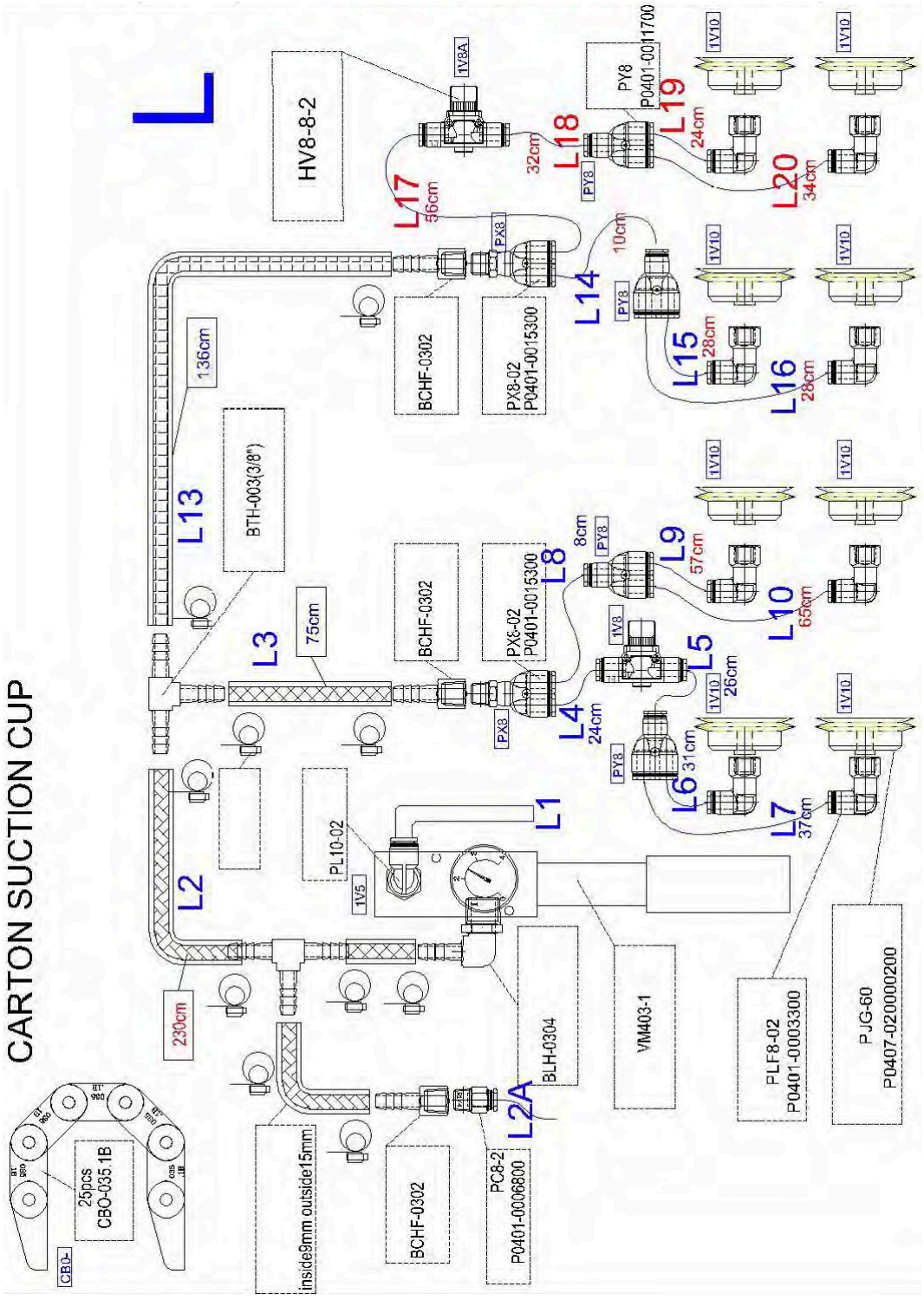

Appendix A: Electrical Schematics

Electrical Schematic Page 1 of 12

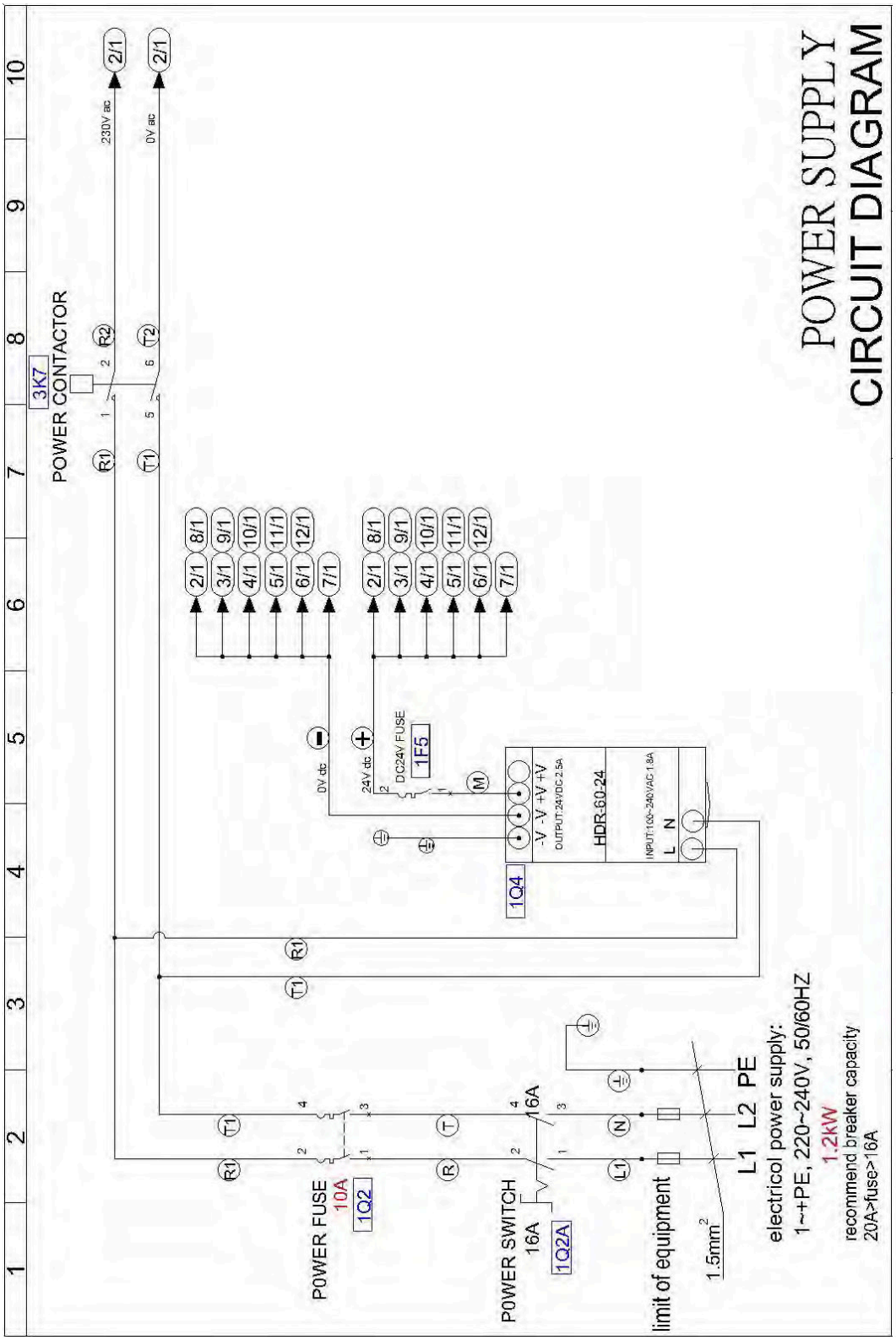

Electrical Schematic Page 2 of 12

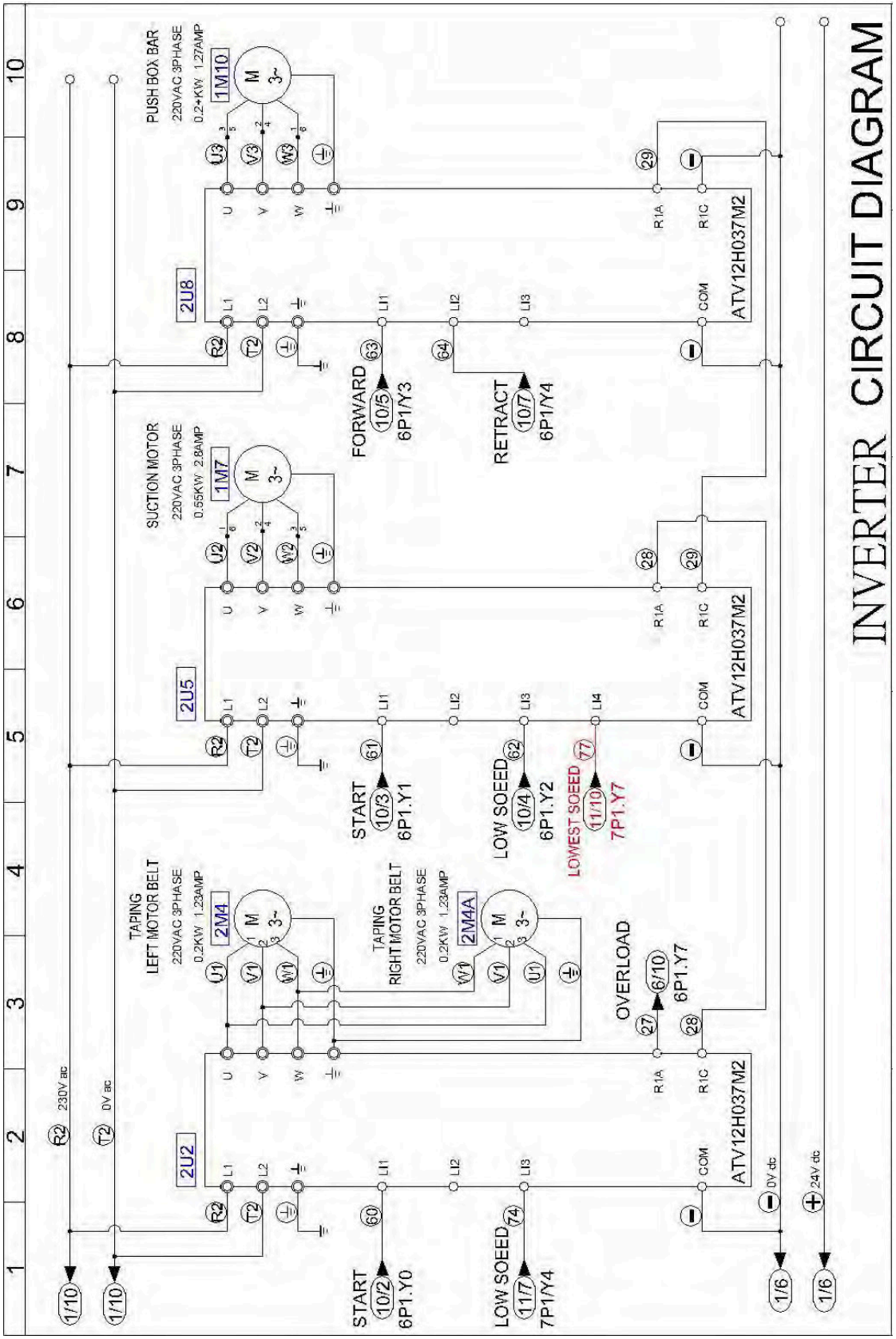

Electrical Schematic Page 3 of 12

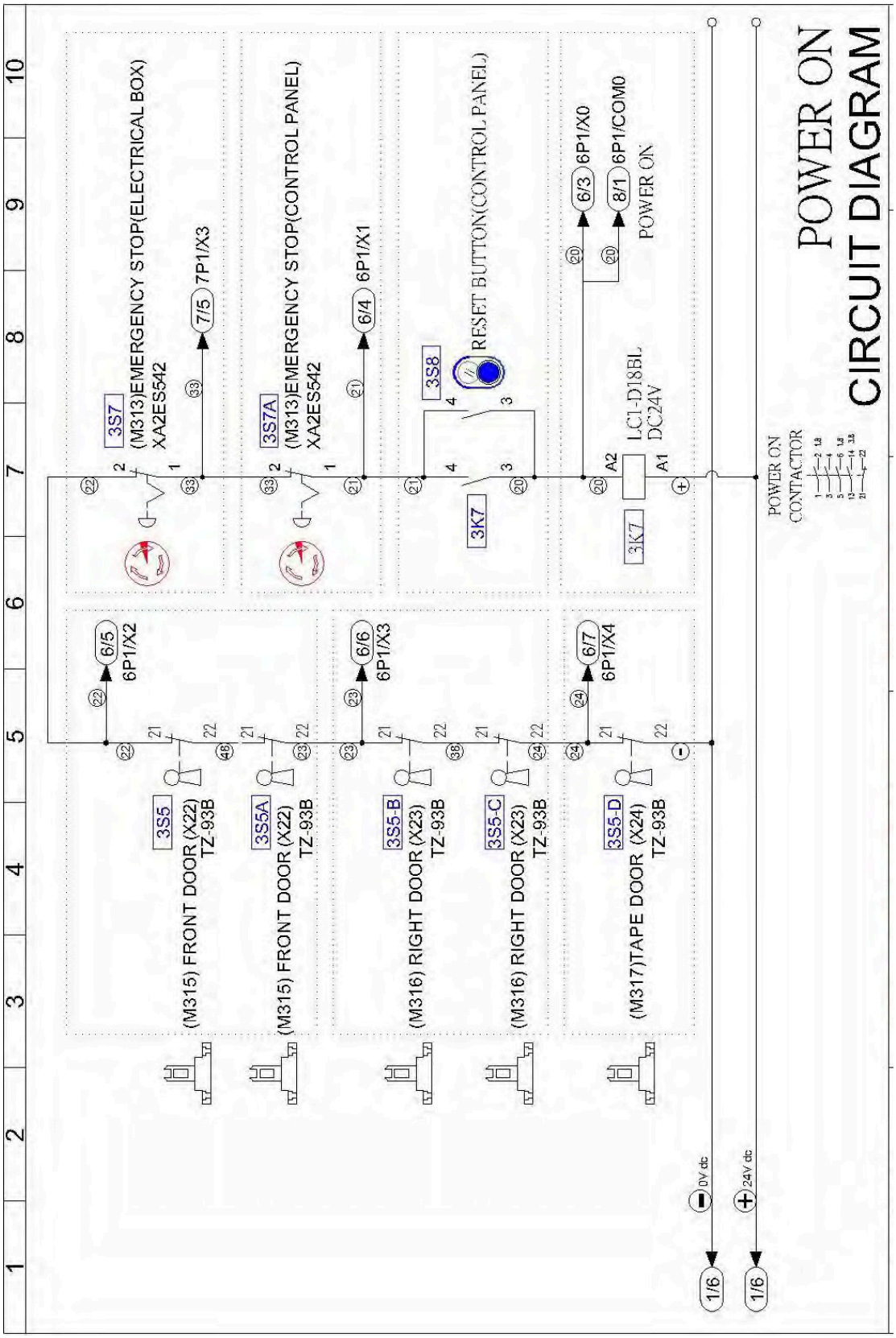

Electrical Schematic Page 4 of 12

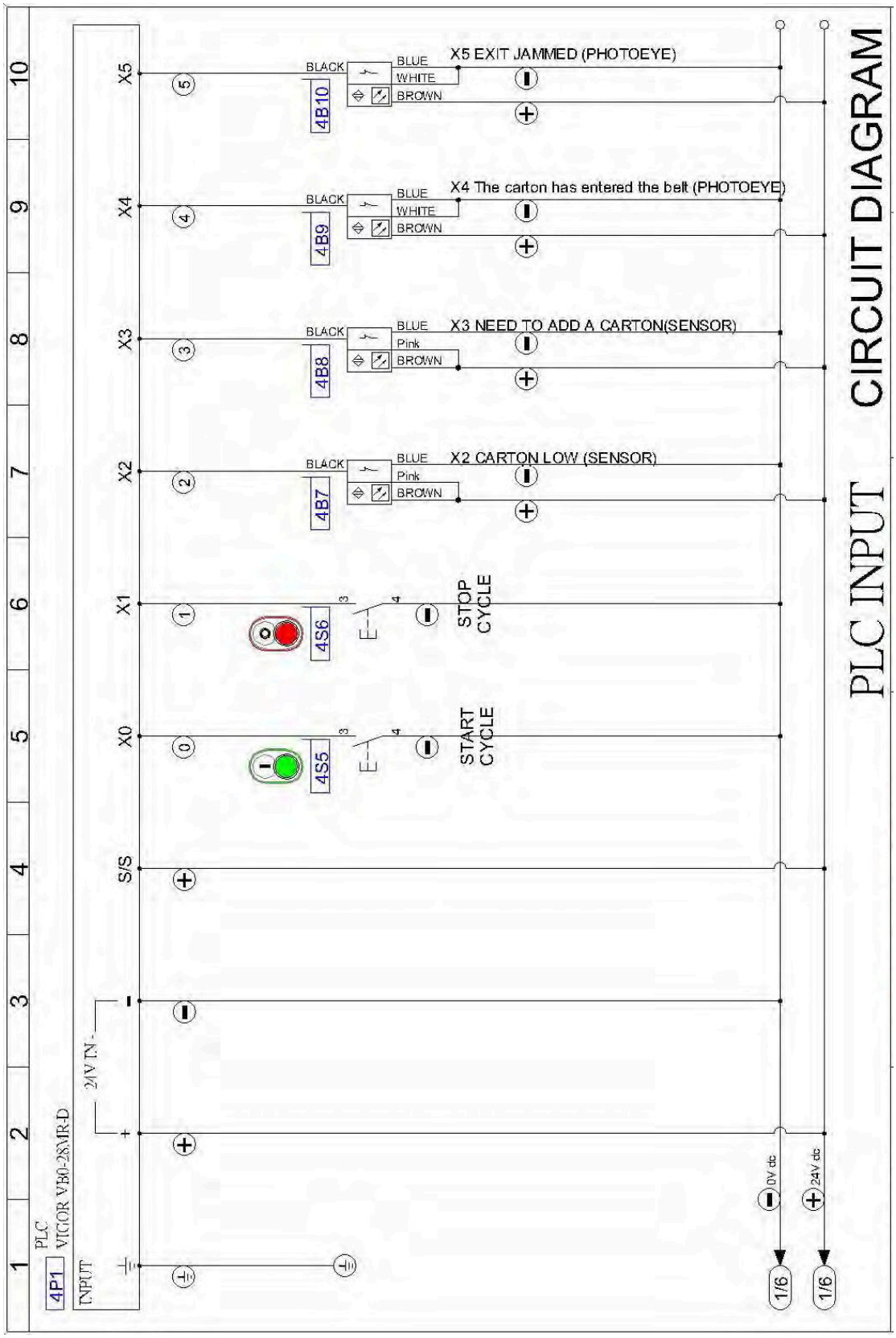

Electrical Schematic Page 5 of 12

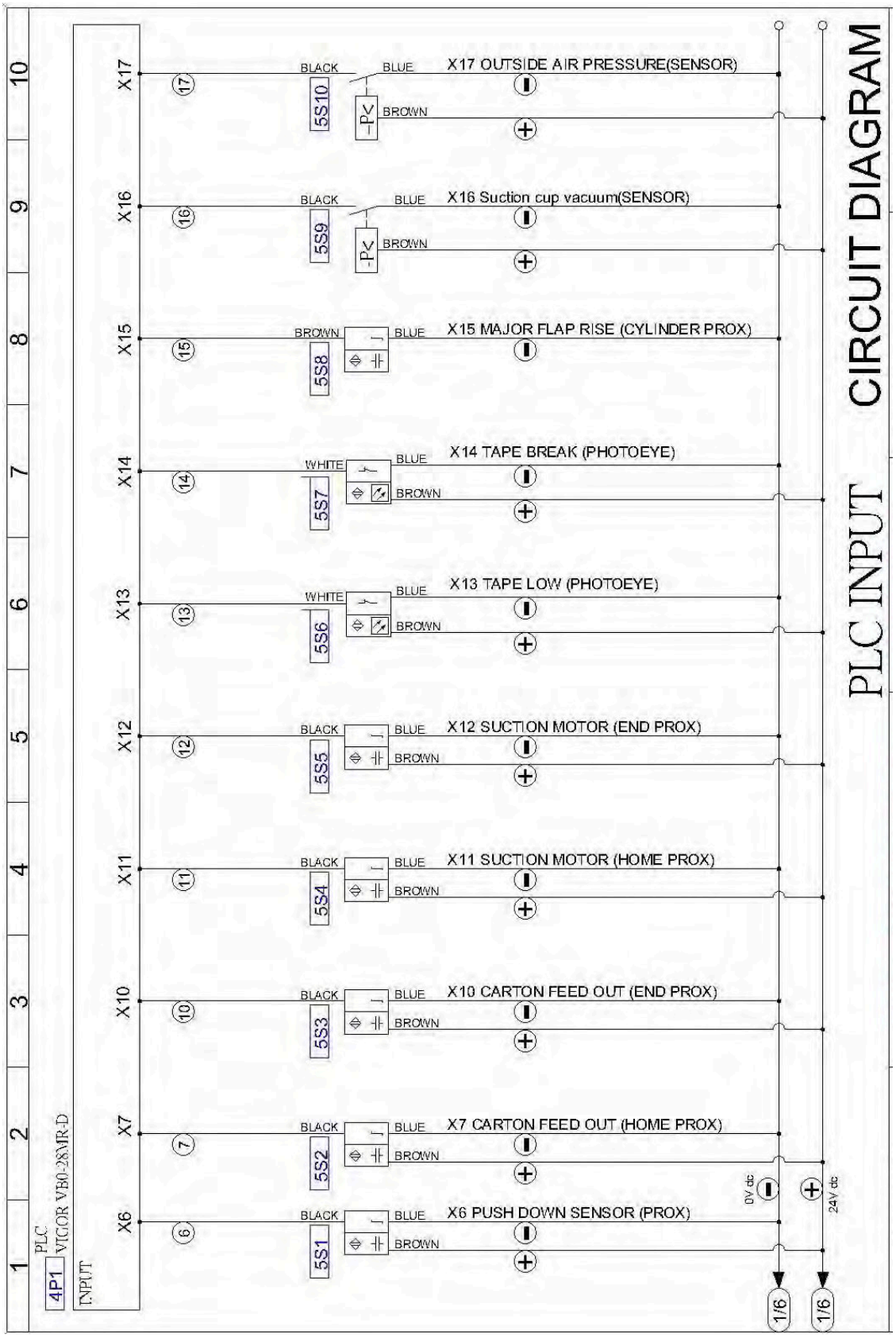

Electrical Schematic Page 6 of 12

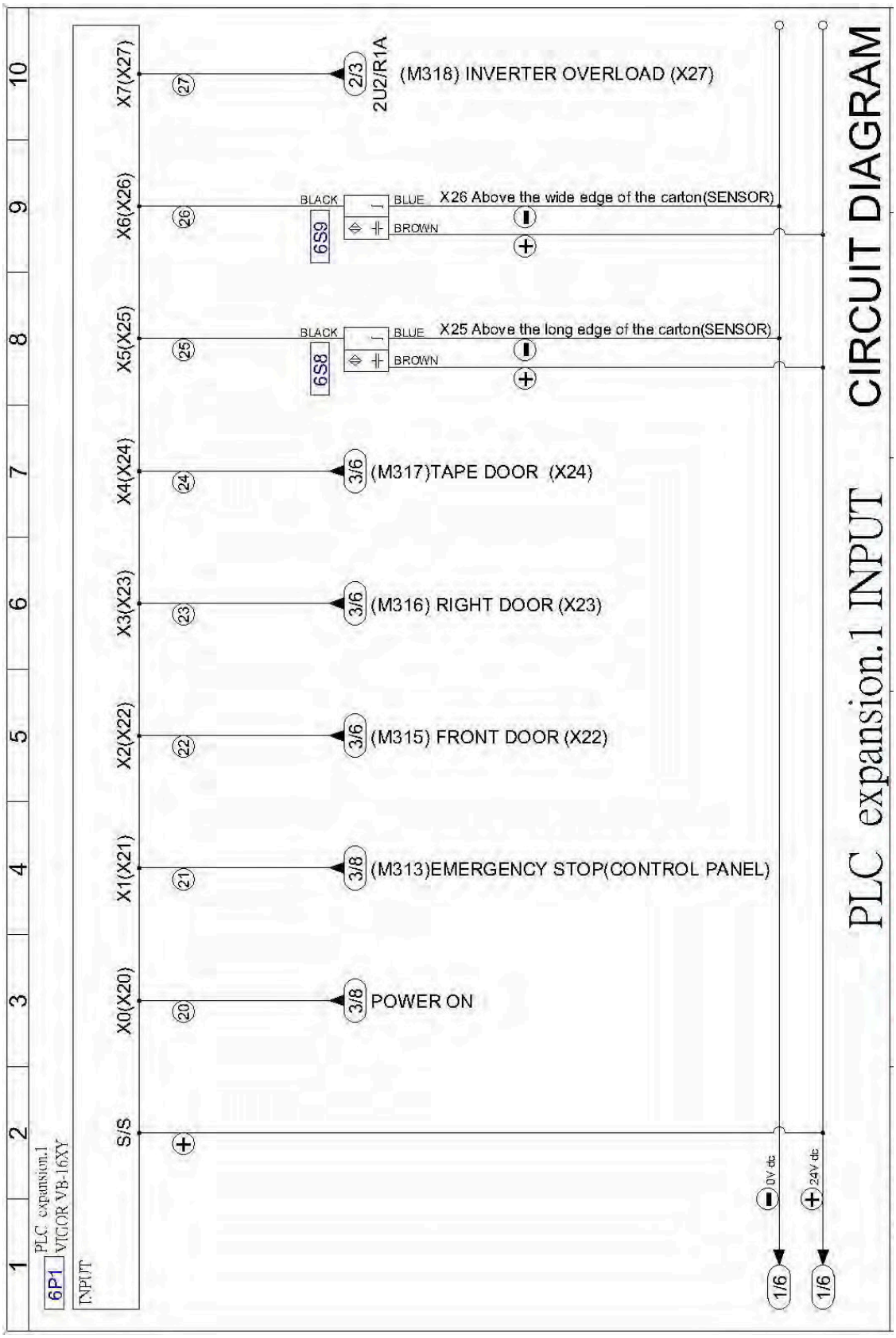

Electrical Schematic Page 7 of 12

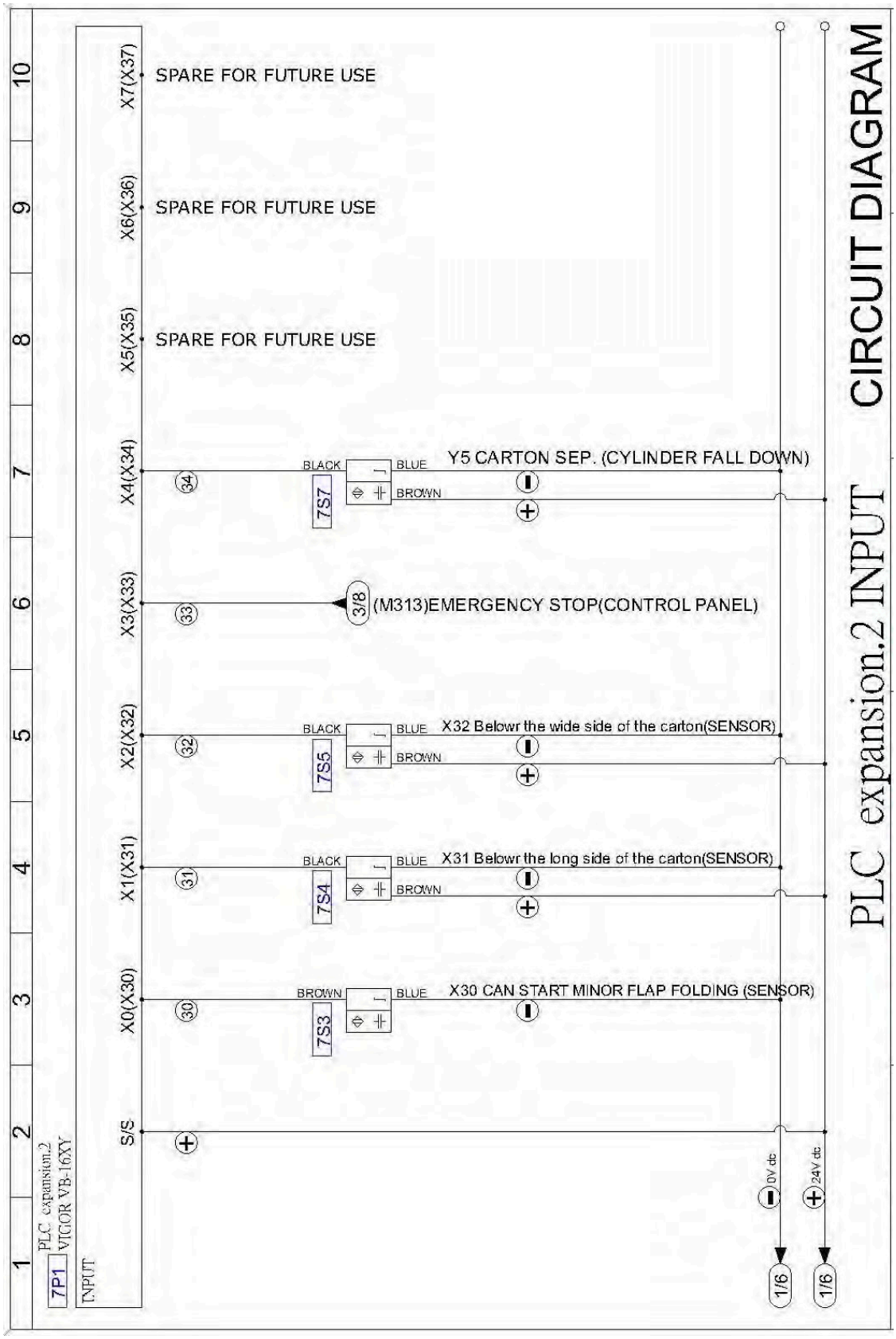

Electrical Schematic Page 8 of 12

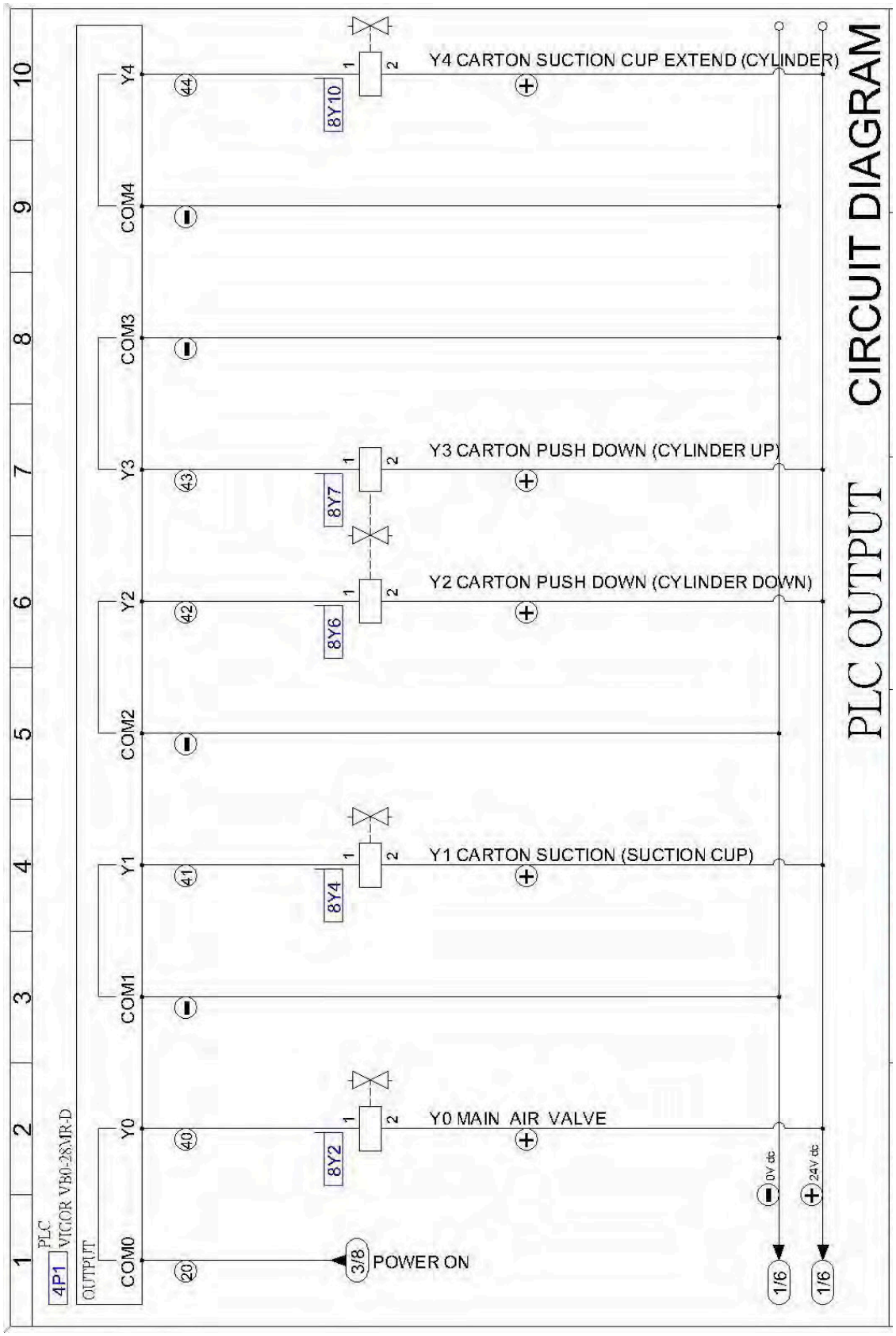

Electrical Schematic Page 9 of 12

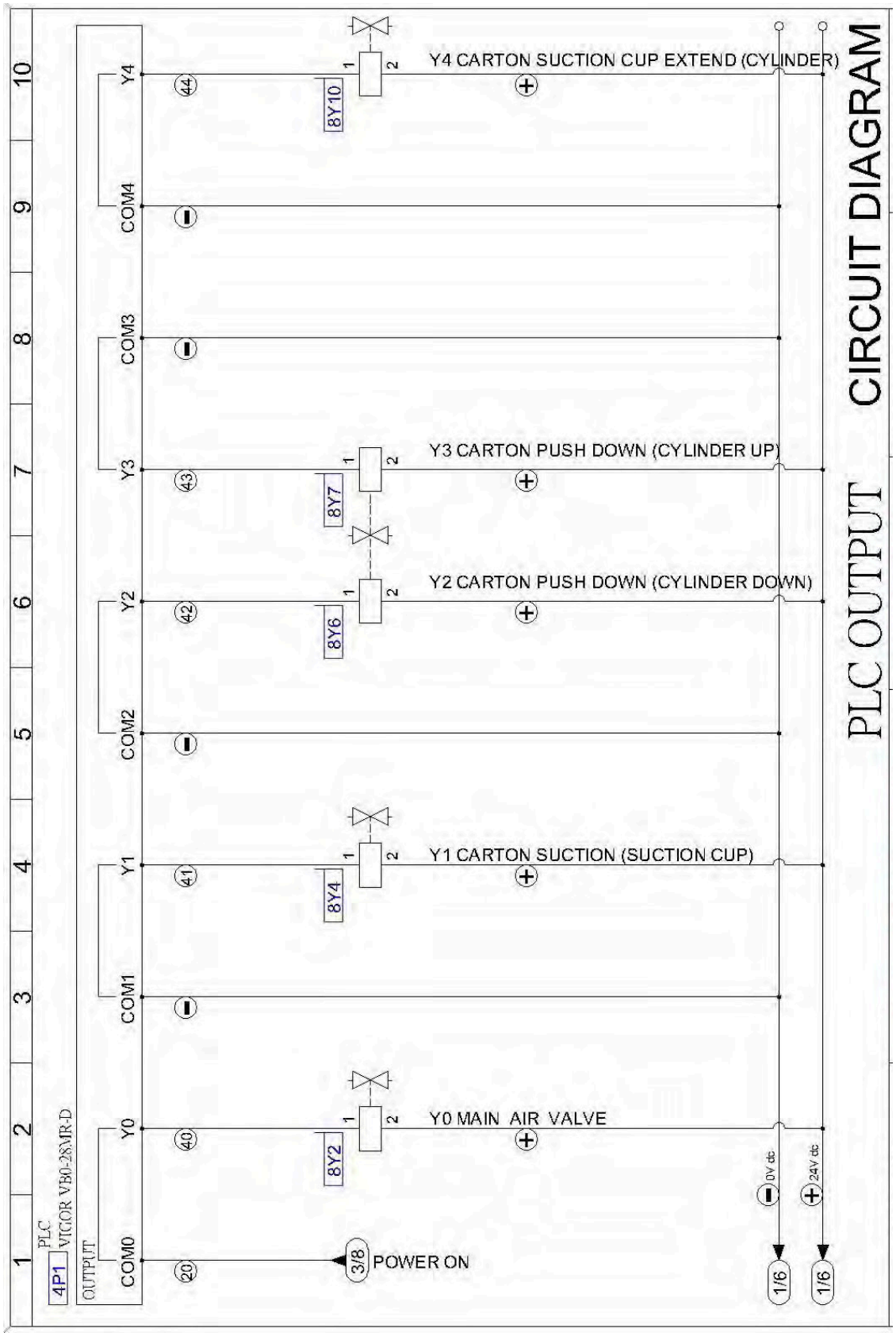

February 21, 2020

Electrical Schematic Page 10 of 12

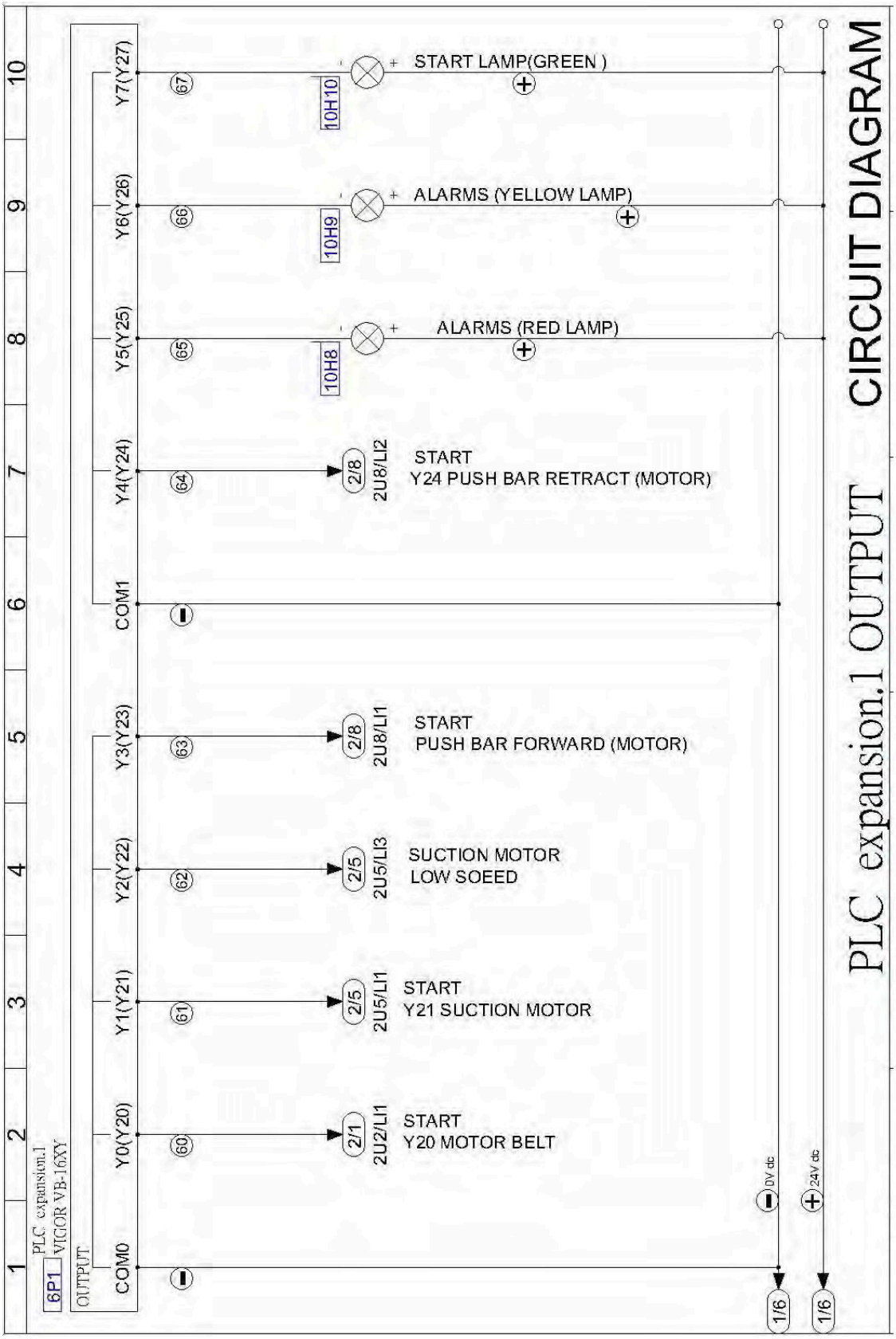

Electrical Schematic Page 11 of 12

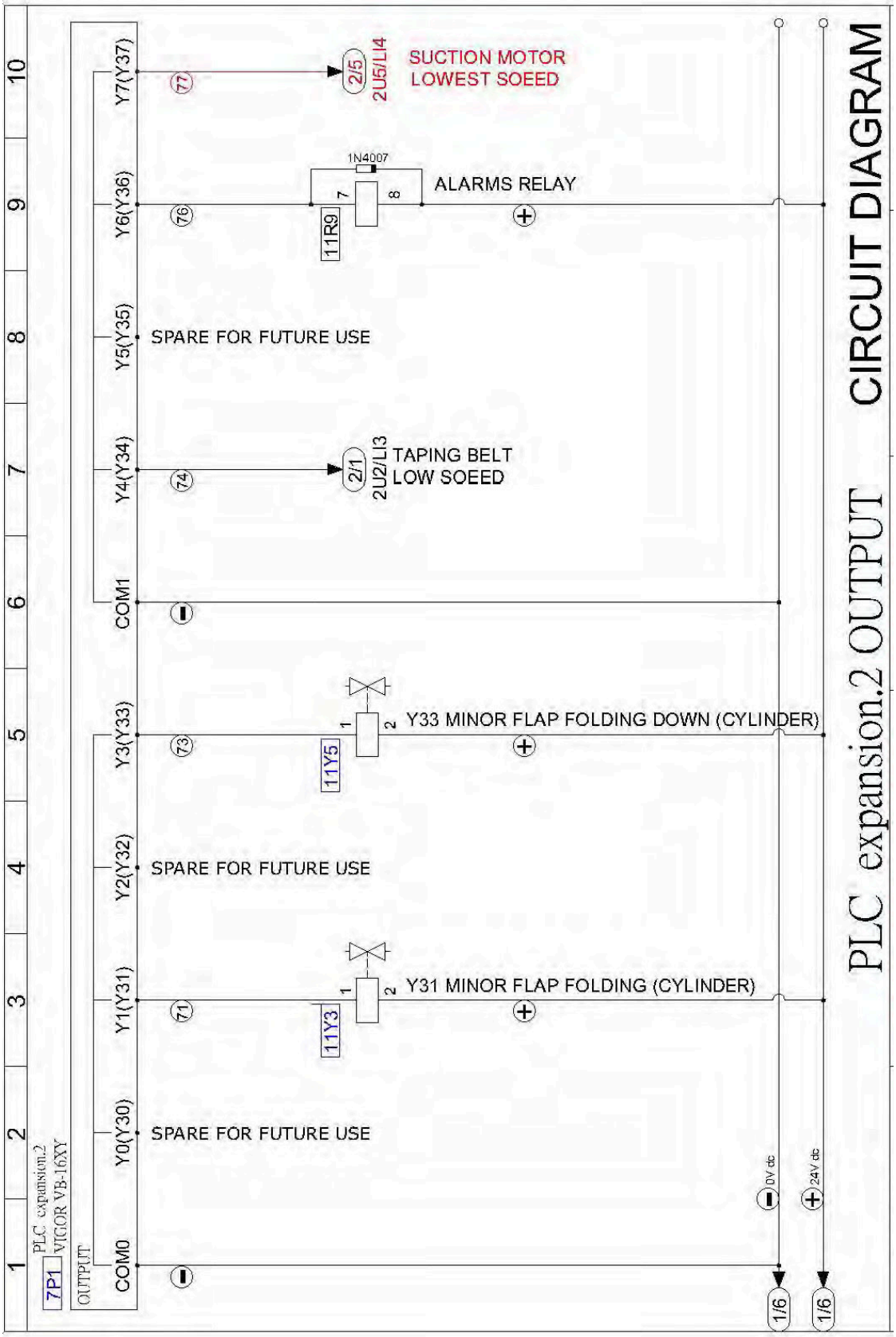

February 21, 2020

Electrical Schematic Page 12 of 12

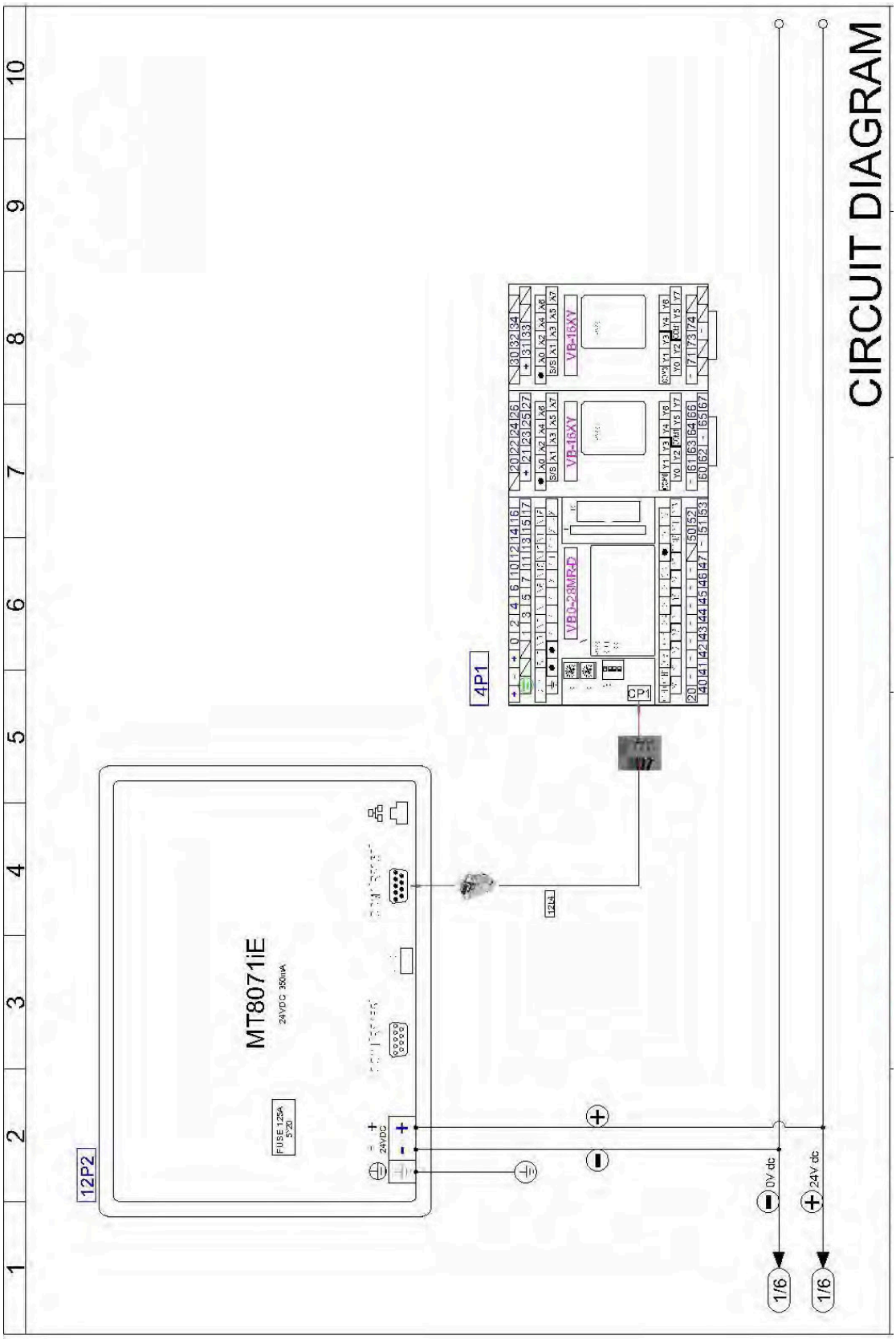

Appendix B: Pneumatic Schematic

Pneumatic Schematic Sheet 1 of 4

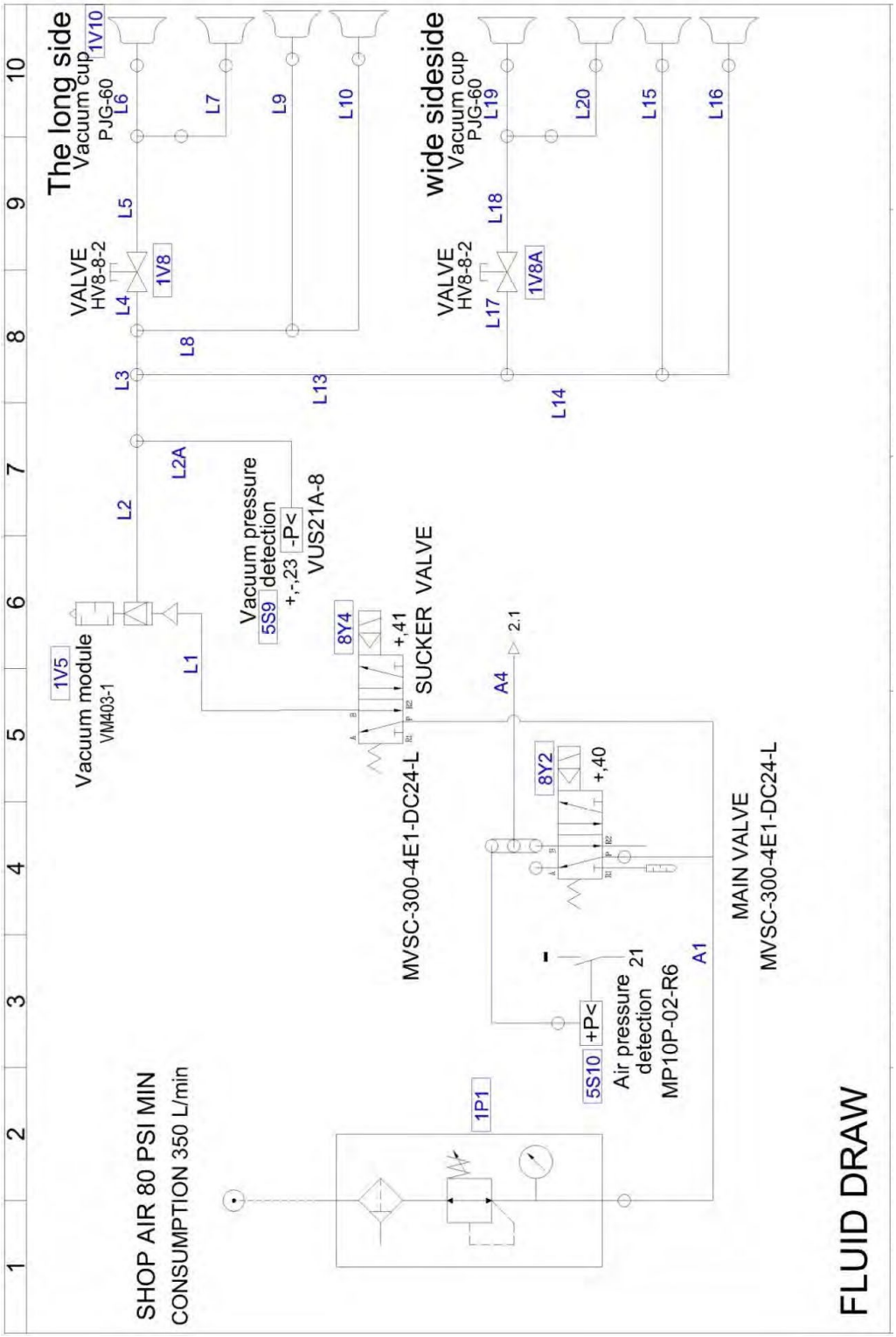

Pneumatic Schematic Sheet 2 of 4

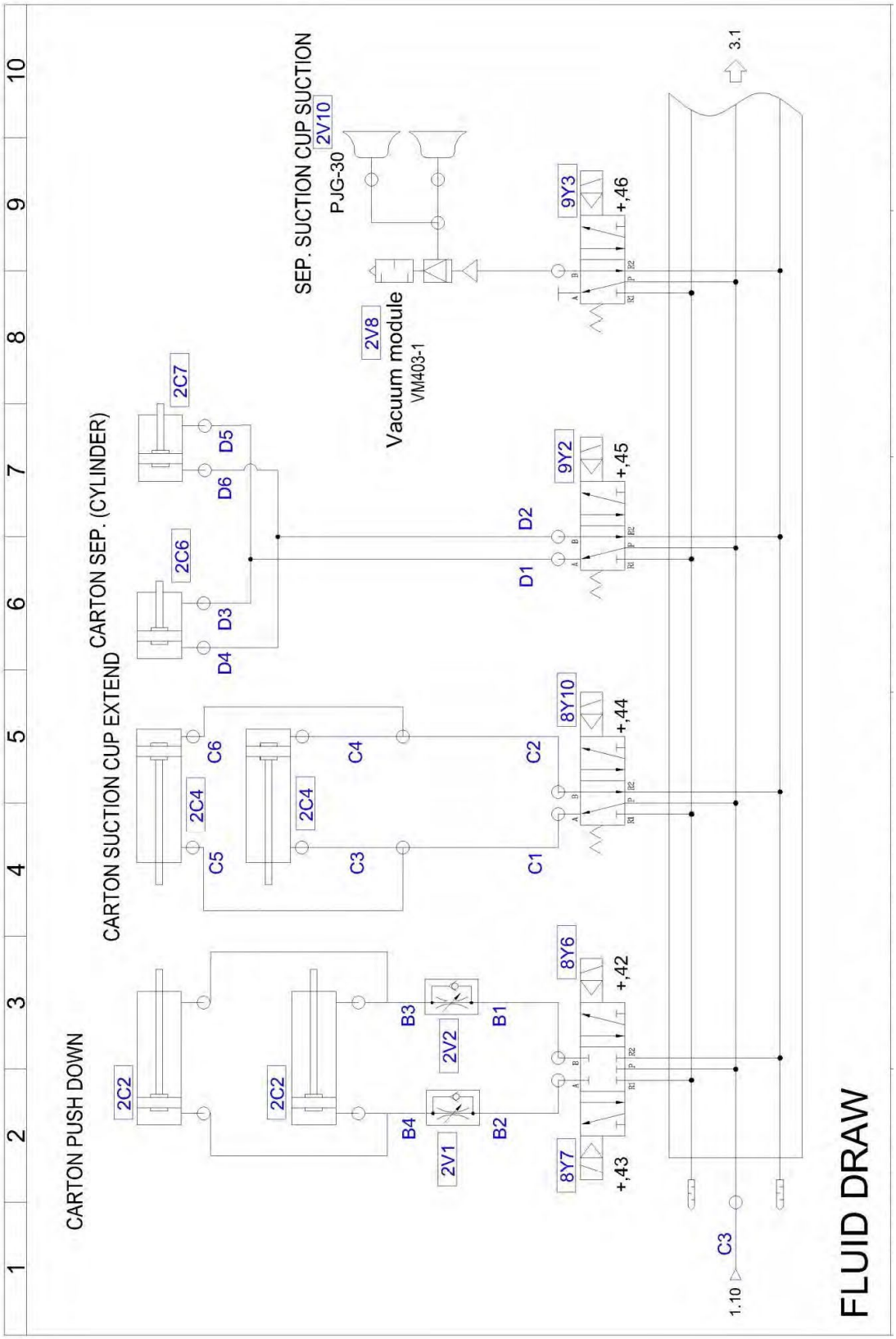

Pneumatic Schematic Sheet 3 of 4

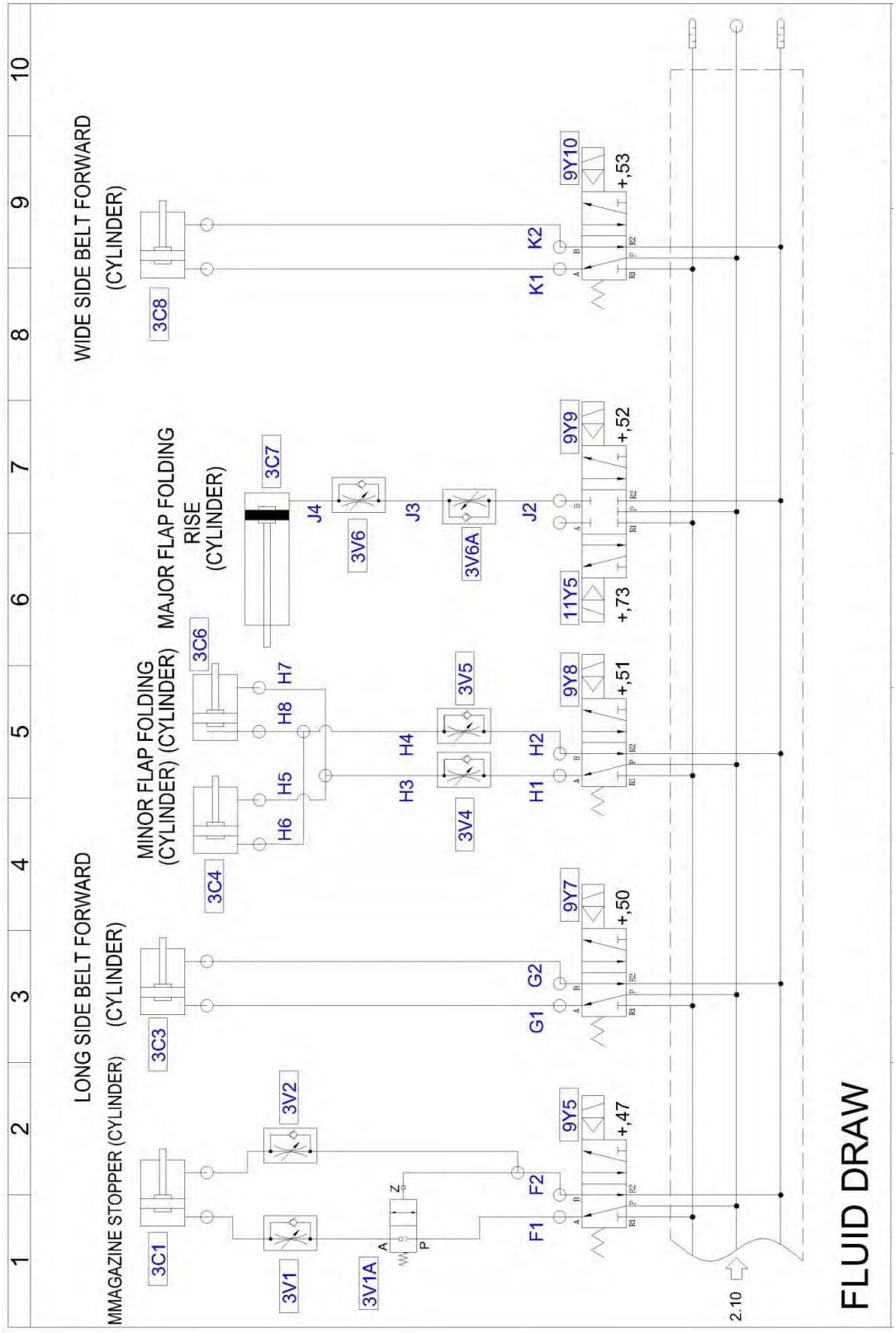

Pneumatic Schematic Sheet 4 of 4

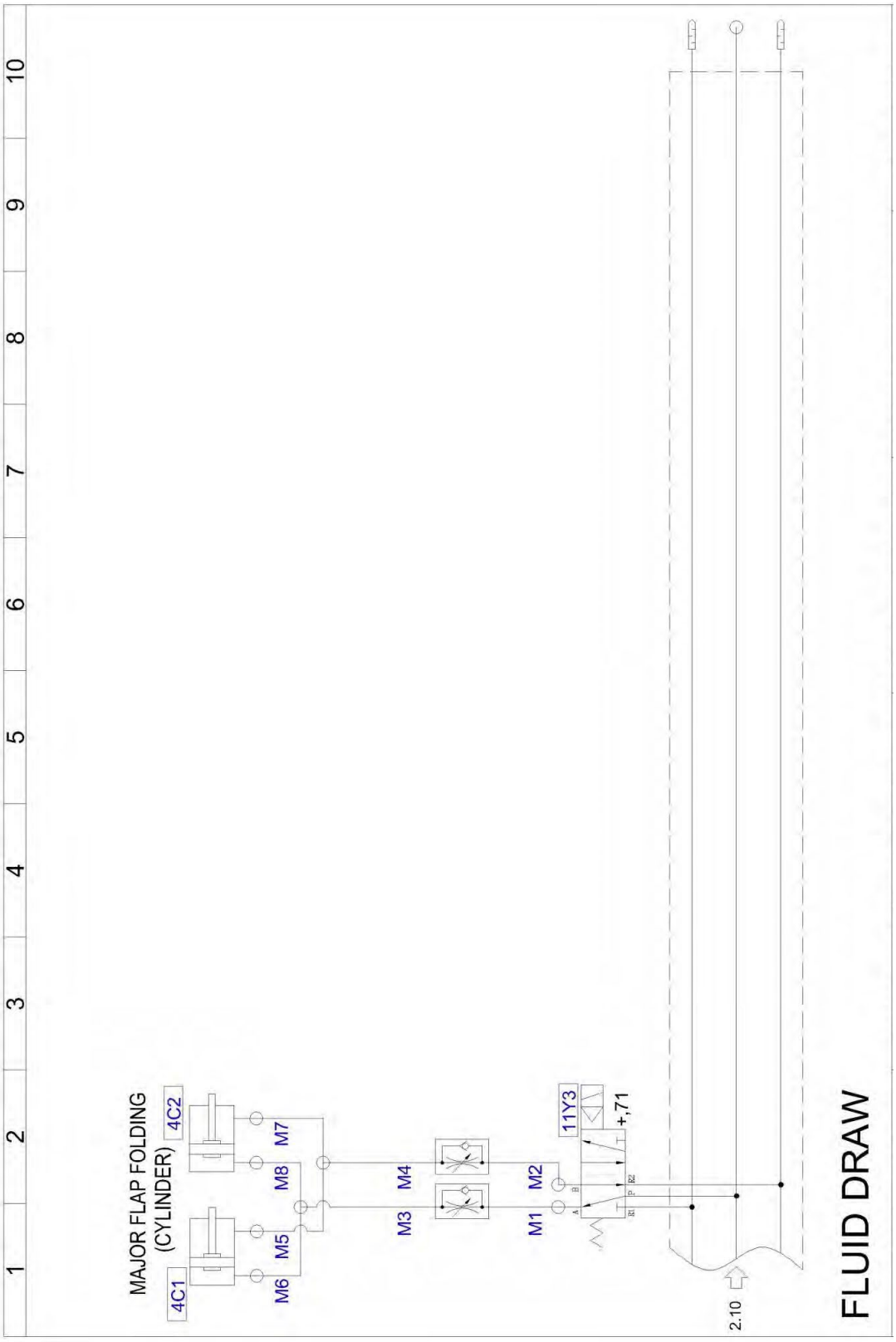

Warranty Statement

Cleveland Equipment ERX-15 Automatic Case Erector

Warranty Statement
Cleveland Equipment warrants that all of the products it ships will be in good working order and free from defects in material and workmanship and will conform to the published specifications for that product.

Warranty Period
1 year (except for moving parts which are subject to normal wear, tear and replacement which are warranted to be free from defects in material and workmanship).

Operation Quality
Quality of operation achieved in a given application is dependent on the installation, the material handling, and maintenance provided. Cleveland Equipment makes no warranty that the quality achieved in an application will match that achieved in our demo facility.

Shipping Policy
Customer pays all incoming shipping. If the item is defective and under warranty, Cleveland Equipment pays return shipping charges for least costly method. If expedited shipping is desired, customer must furnish his shipping account and shipping fees will be charged to that account.

Warranty Verification
If you conclude that a product may be defective and may be covered by warranty, obtain a Return Material Authorization number by calling our technical support number (toll free at 1-866-888-6327 or e-mail: sales@clevelandequipment.com). Once an RMA number has been obtained, return the defective item to Cleveland Equipment. Cleveland Equipment will analyze the product and, if found to be defective, we will, at our option, replace or repair the item. If the item is found to not be eligible for warranty, you will be notified and may decide on disposition. Defective products will be replaced or repaired as promptly as possible.

Warranty Eligibility
The warranty provided by Cleveland Equipment is only to the original buyer.

Limited Warranty
THE ABOVE WARRANTY IS EXCLUSIVE AND IN LIEU OF ALL OTHER WARRANTIES, WHETHER EXPRESSED OR IMPLIED, INCLUDING THE IMPLIED WARRANTIES OF MERCHANTABILITY, FITNESS FOR A PARTICULAR PURPOSE AND NONINFRINGEMENT.

Disclaimer of Damages
REGARDLESS OF WHETHER ANY REMEDY SET FORTH HEREIN FAILS OF ITS ESSENTIAL PURPOSE, IN NO EVENT WILL CLEVELAND EQUIPMENT BE LIABLE FOR ANY SPECIAL, CONSEQUENTIAL, INDIRECT OR SIMILAR DAMAGES,

INCLUDING LOST PROFIT OR LOST OPPORTUNITIES OF ANY TYPE ARISING OUT OF THE USE OR INABILITY TO USE THESE PRODUCTS EVEN IF CLEVELAND EQUIPMENT HAS BEEN ADVISED OF THE POSSIBILITY OF SUCH DAMAGES.

Customer Support

Cleveland Equipment Technical Service

For help setting up or operating the ERX-15, please contact Cleveland Equipment using the options listed below.

Phone	(866) 888-6327
E-mail	sales@clevelandequipment.com
Web	www.clevelandequipment.com

Thanks again for your purchase of Cleveland Equipment products. We are pleased to be a part of your packaging needs.



Cleveland
Equipment